Roll & Hill

CONTENTS

Pendant - 04

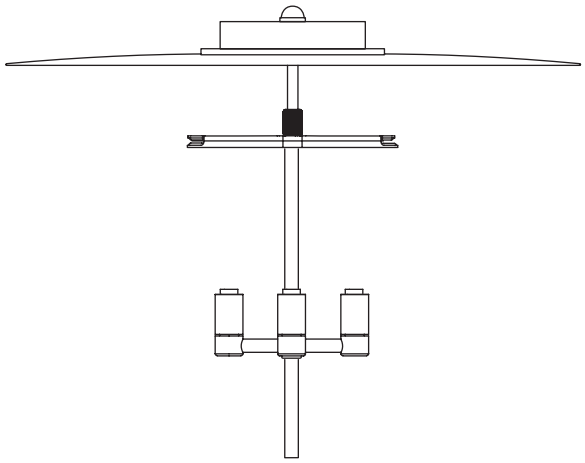

Large Glass

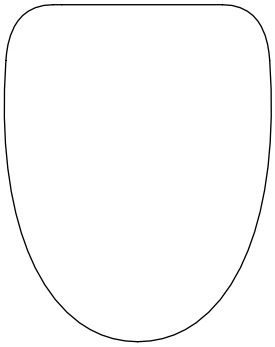

(4) Stem and 1/8 IPS Threaded Rod

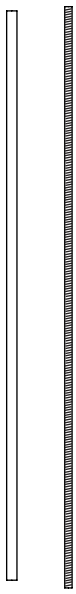

#8-32 Screws (2)

Wagos (7)

Diffuser (4)

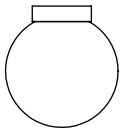

(4) Nuts

Acorn cap

Cover top

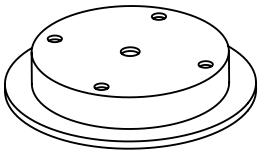

Canopy with crossbar Assembly

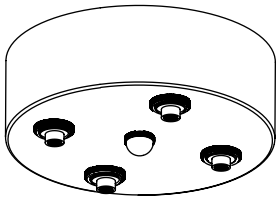

Bottom finial

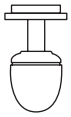

SAFETY INFORMATION

Only suitable for direct mounting on non-combustible surfaces.
Under no circumstances can Bell Pendants be mounted on normally flammable surfaces.
Suitable for dry or damp, indoor use only.
Maximum ambient temperature: 25° C

Stem and cover tube length adjustment

Note: Please contact a licensed electrician.

Example fixture only:

To measure length of stem, first determine overall length (OAL), subtract 2" for the canopy height and subtract the fixture height from the OAL. Fixture height is measured from bottom of the fixture to stem connection point.
The resulting measurement is the final stem length.

Ex. The fixture below has an OAL of 40" and a fixture height of 21.2".
40" OAL - 2" canopy - 21.2" fixture height = 16.8" stem

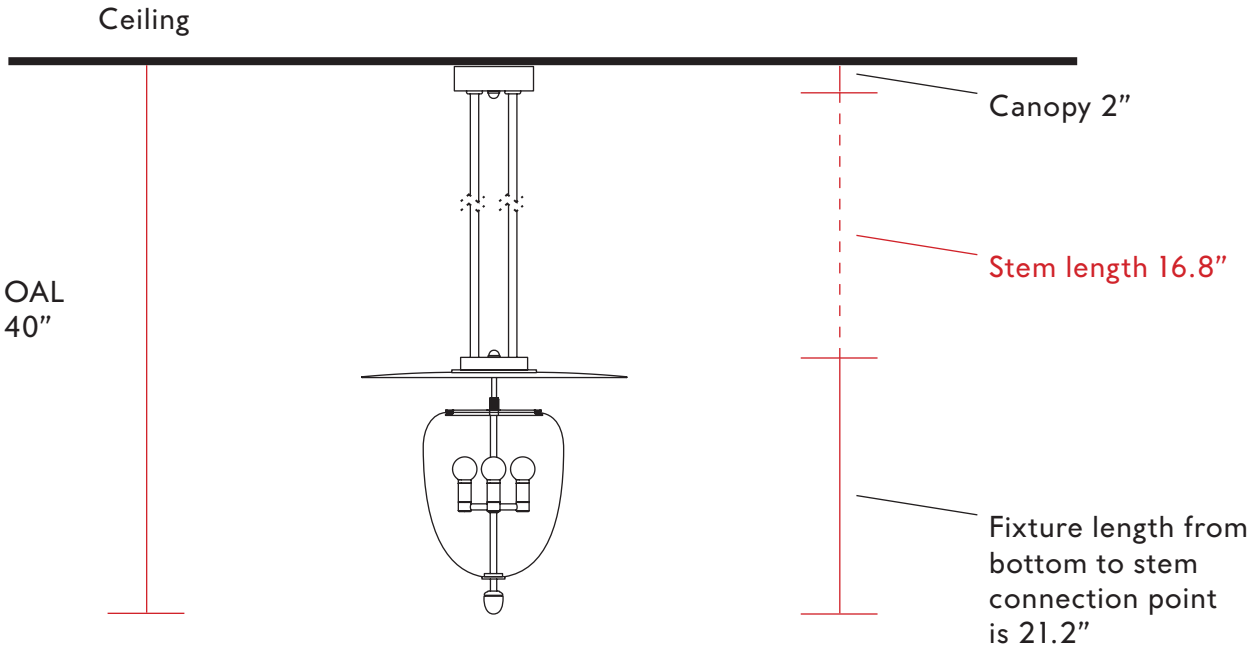

Stem and cover tube length adjustment

Note: Please contact a licensed electrician.

Example fixture only:

1. To customize the length of the provided stem, cut cover tube to desired length.
   Then cut the inner threaded tube so that it remains 1" longer than the cover tube.

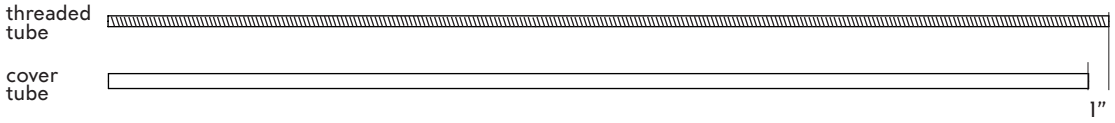

2. Mark the length of the tube required,
   using a marker or tape.

   Then hold down the tube with a hand or a clamp,
   use a hacksaw or electrical tool to cut the tube.
   Recommended to clean tube after cutting to
   remove any metal chippings.

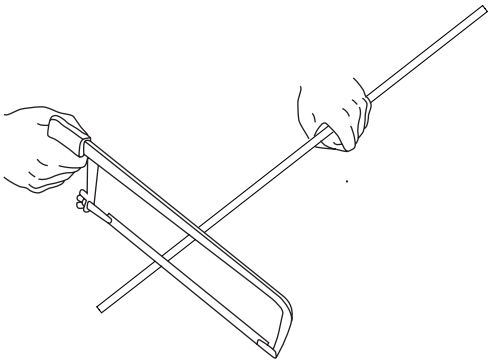

3. Now that the cover tube is cut to 16.8", measure the all thread tube to be 17.8" long.
   And place a mark, with a marker or tape.

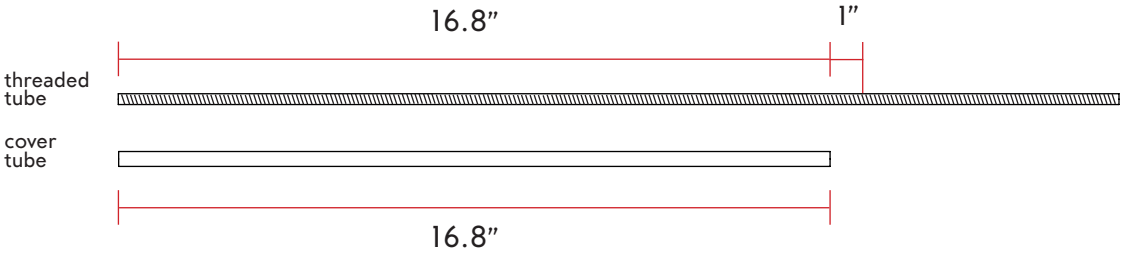

4. Hold down the all thread with a hand or a clamp,
   use a hacksaw or electrical tool to cut the all
   thread tube.

Recommended to clean all thread tube after cutting
to remove any metal chippings.

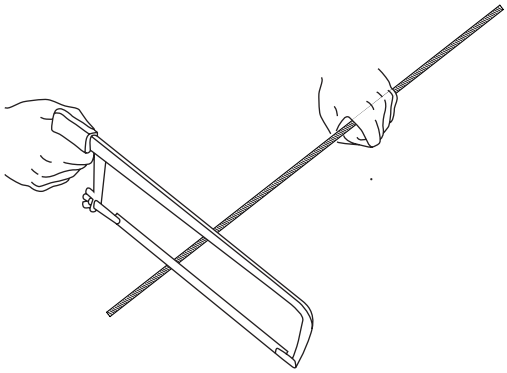

CEILING INSTALLATION

Note: Please contact a licensed electrician.

1. Unscrew the four canopy nuts (A) from the canopy (B), to release the crossbar assembly (C).

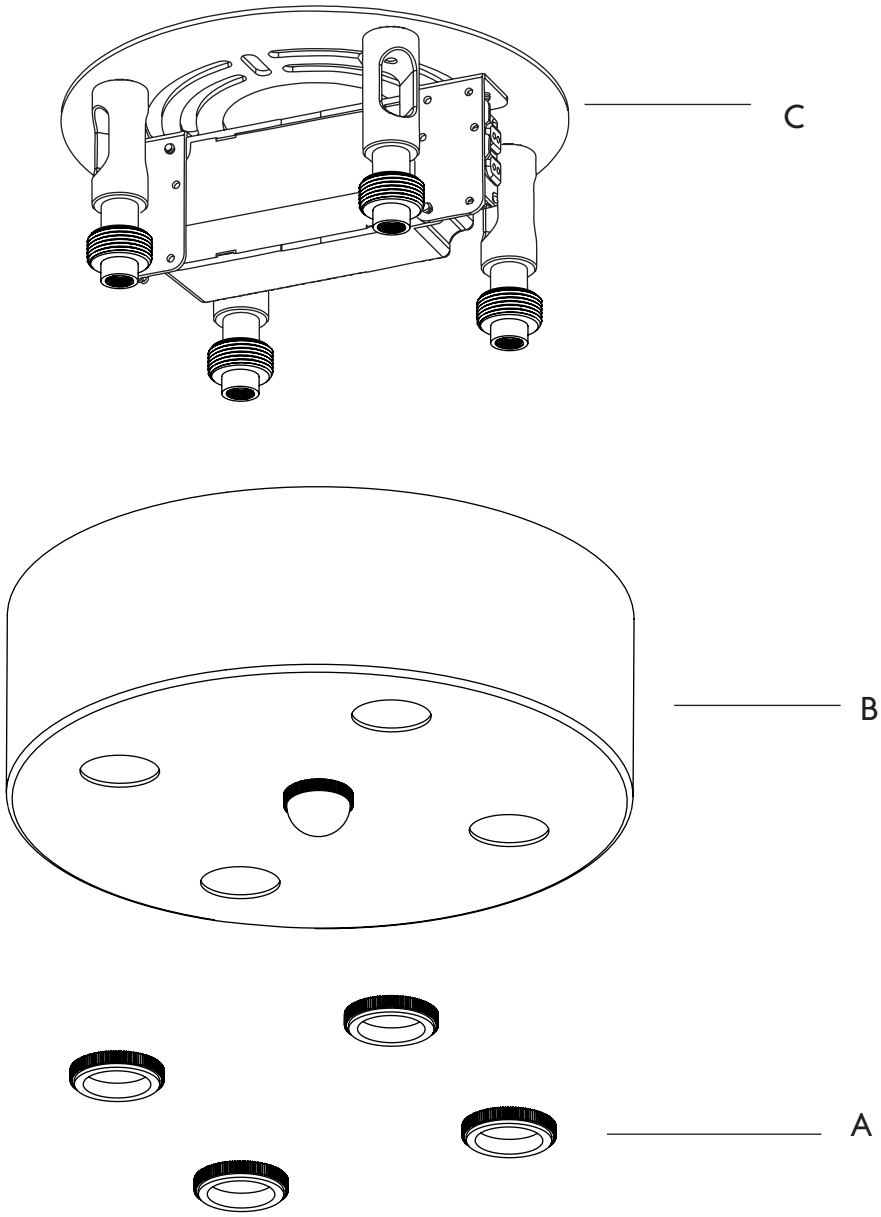

CEILING INSTALLATION

Note: Please contact a licensed electrician.

2. Slide the canopy nut (A) and canopy (B), onto the threaded rod with cover tube (D).
3. Take the spool of red and black wires and make low voltage connection with provided 2-port wags (E).
4. Feed the black and red wires through one of the closet hickey (F).
5. Optional: Connect the dimming wires with the provided 2-port wagos (G).
6. Screw in all four threaded rods (D), into the four hickeys (F). Do not close the canopy yet.

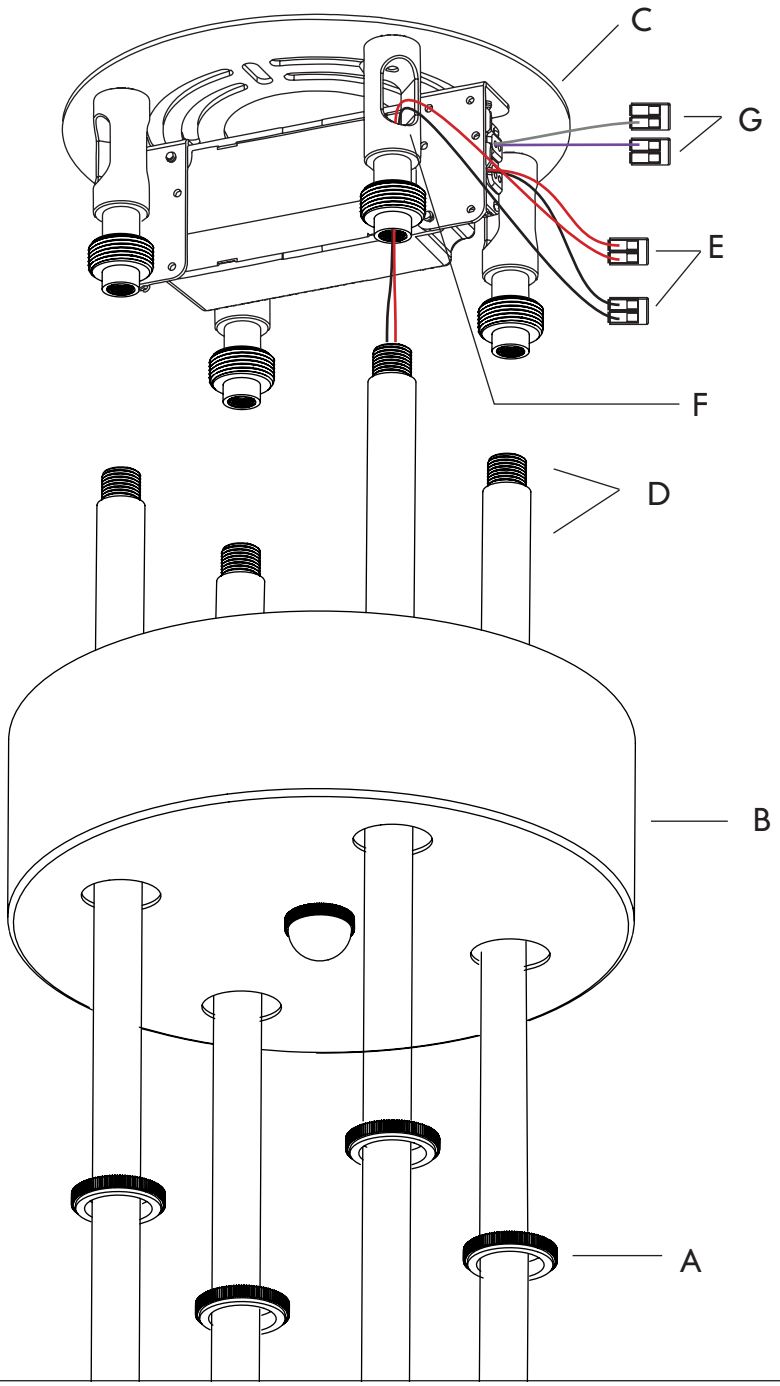

CEILING INSTALLATION

Note: Please contact a licensed electrician.

7. From the bottom, fit the threaded rods and cover tubes (D) on to the cover top (M).
8. Secure cover top to the rods with four nuts (I).
   Be sure to pull the black and red wires through.

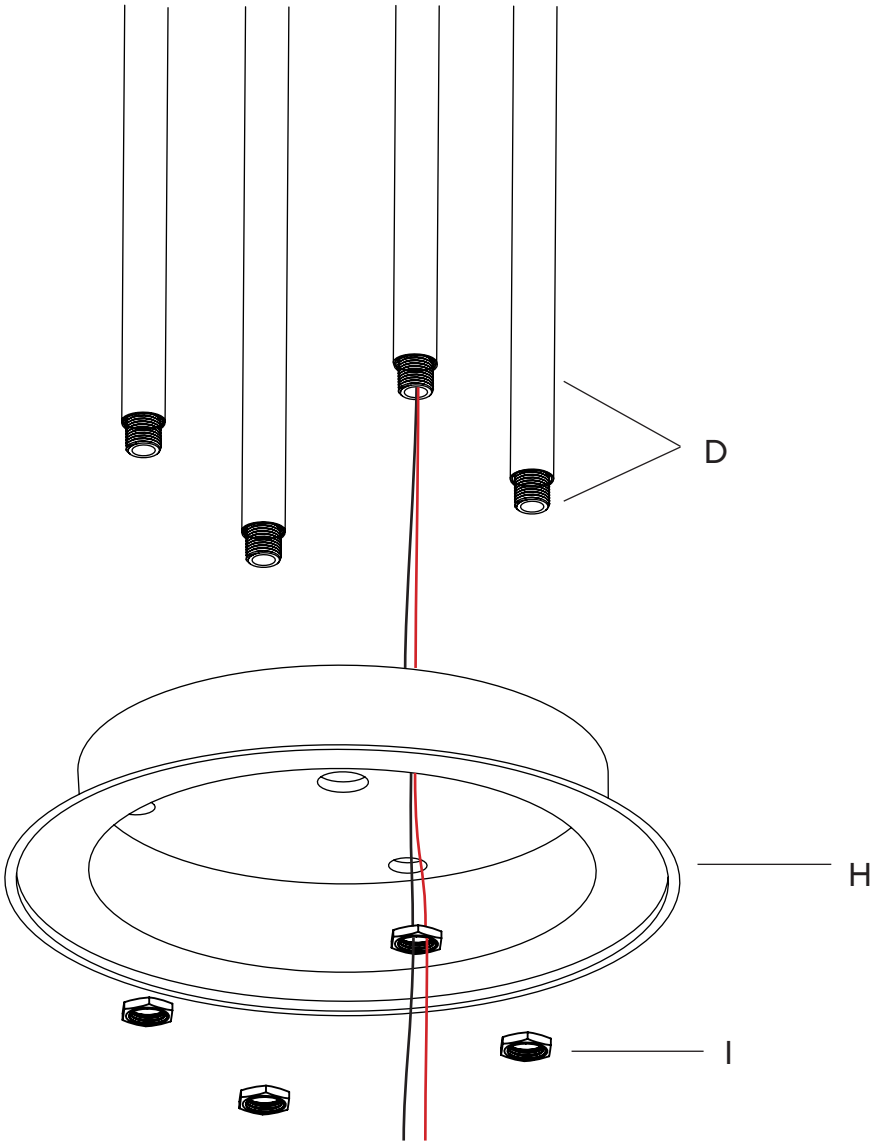

CEILING INSTALLATION

Note: Please contact a licensed electrician.

9. Raise the crossbar with stem assembly (C) to the J-box (J).
10. Secure the crossbar assembly to J-box with the provided 2 screws (K).
11. Pull the lead wires through the center hole of the crossbar.
12. Make the lead wire connection from J-box to LED driver with the provided 2-port wagos (L).
13. Make the ground wire connection using the provided 2-port wago (M).
14. Bring the canopy (B) over the crossbar assembly, and secure it with four canopy nuts (A).

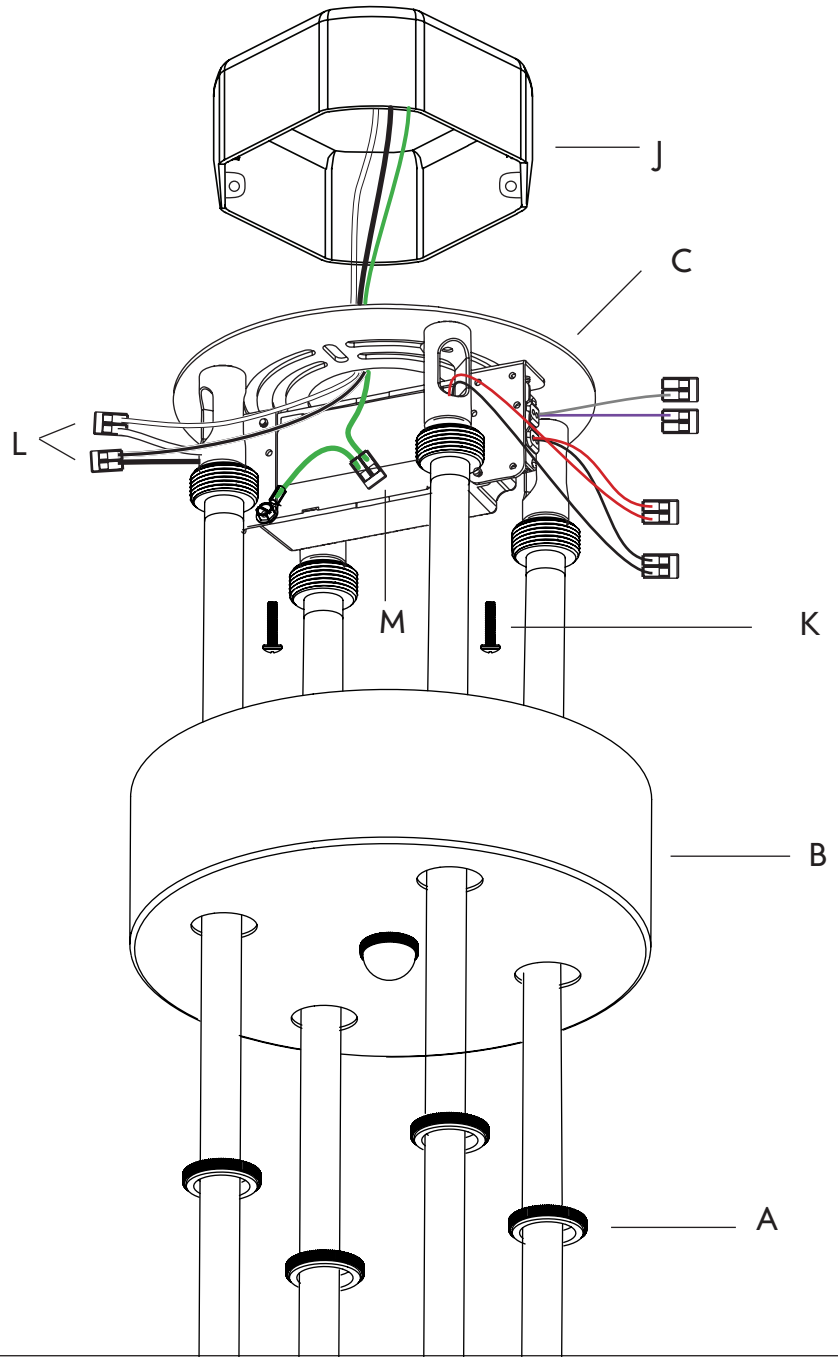

CEILING INSTALLATION

Note: Please contact a licensed electrician.

15. Bring the fixture assembly (O), up to the cover top (M).
16. Make the low voltage wire connection with the provided 5-port wagos (P).
17. Secure the fixture to the cover top with the acorn cap (Q).
    Be sure not to pinch any wires.

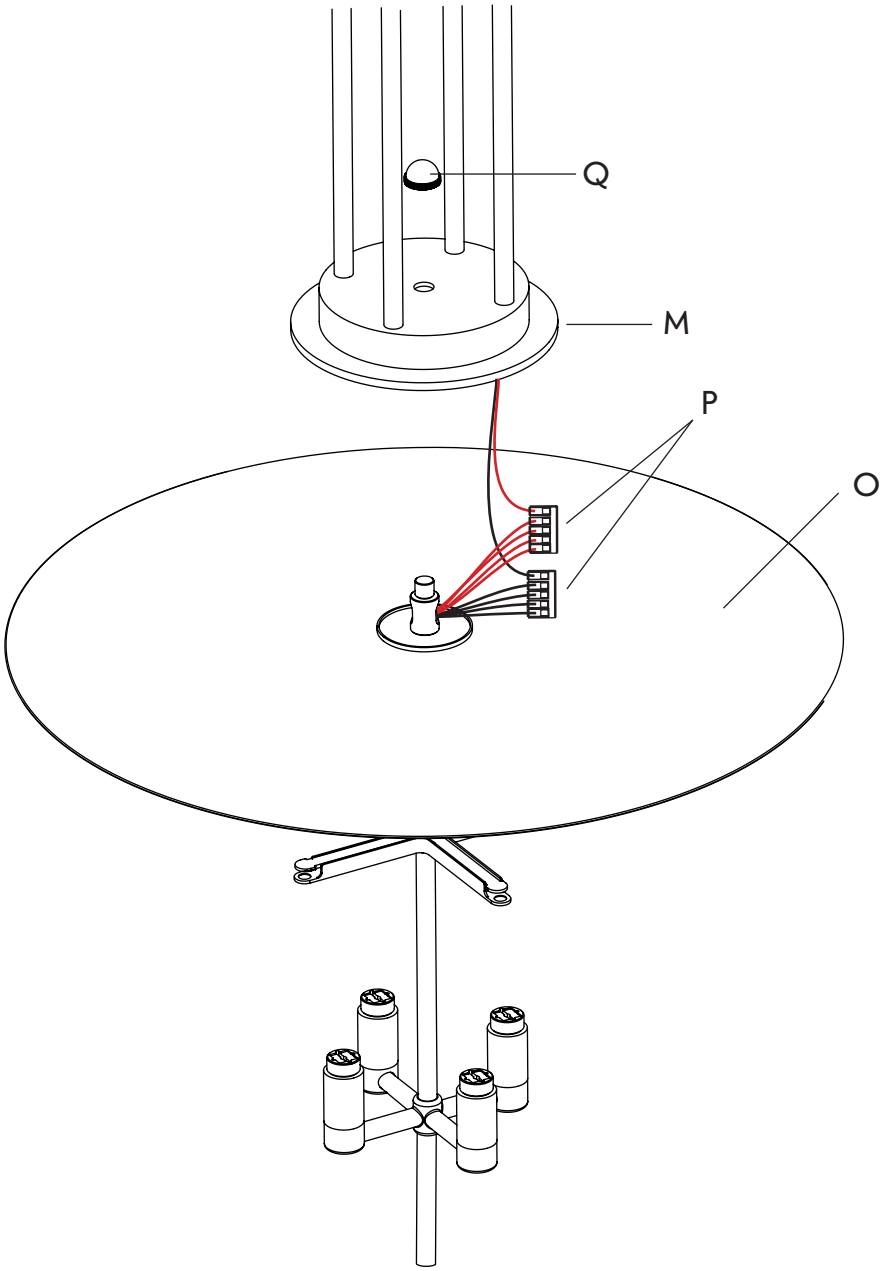

DIFFUSER INSTALLATION

Note: Please contact a licensed electrician.

1. Install the four diffusers (A) by screwing them onto the LED cups (B) in a clockwise direction.

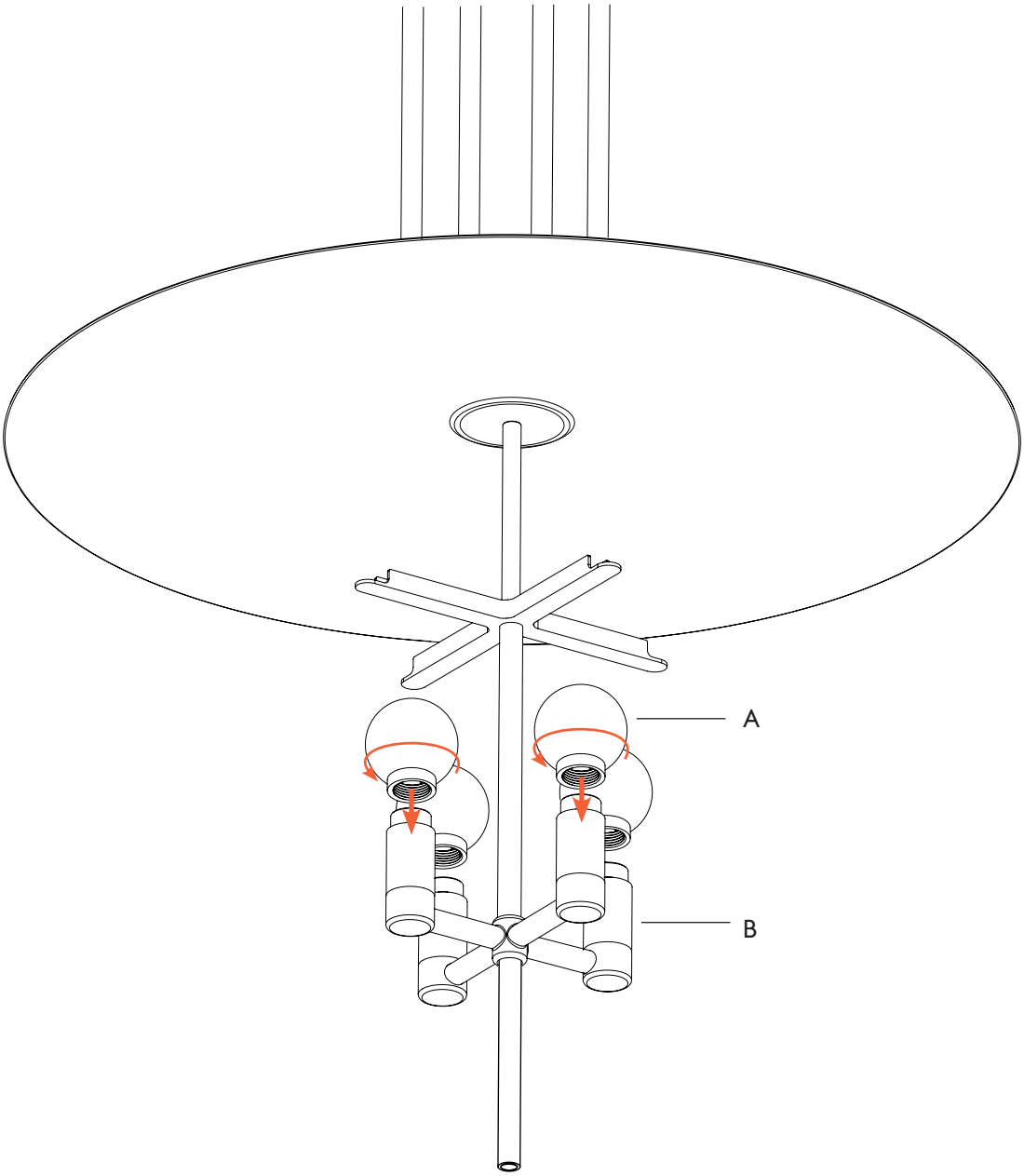

GLASS INSTALLATION

Note: Please contact a licensed electrician.

1. Unscrew the thumb nut (A) raising the arm fitter (B).

2. Slide the glass (C) at an angle into each arm slot one at a time, and rest the glass evenly on rubber pads (D).

3. Fit the arm fitter (B) over the glass, and secure with the thumb nut (A).

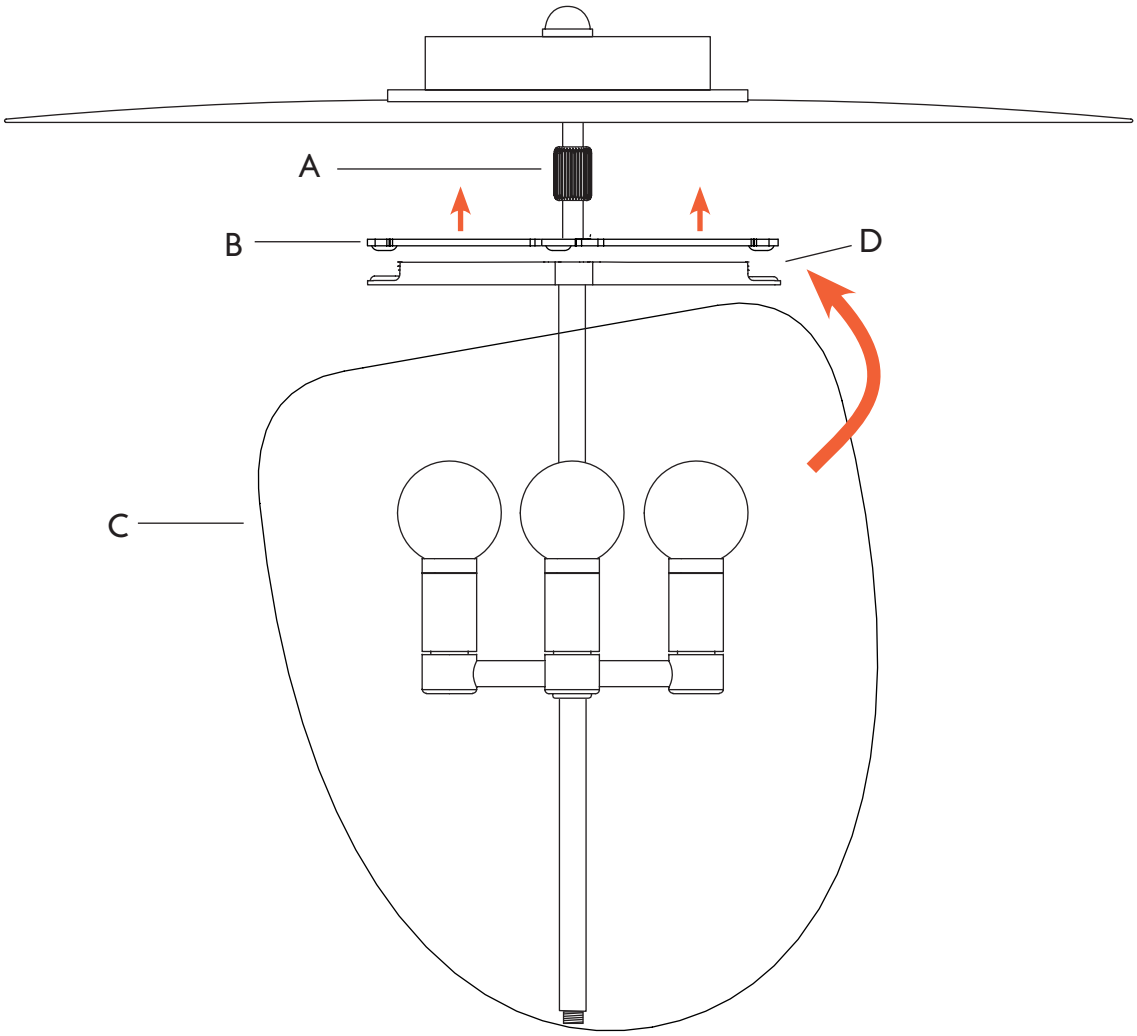

GLASS INSTALLATION

Note: Please contact a licensed electrician.
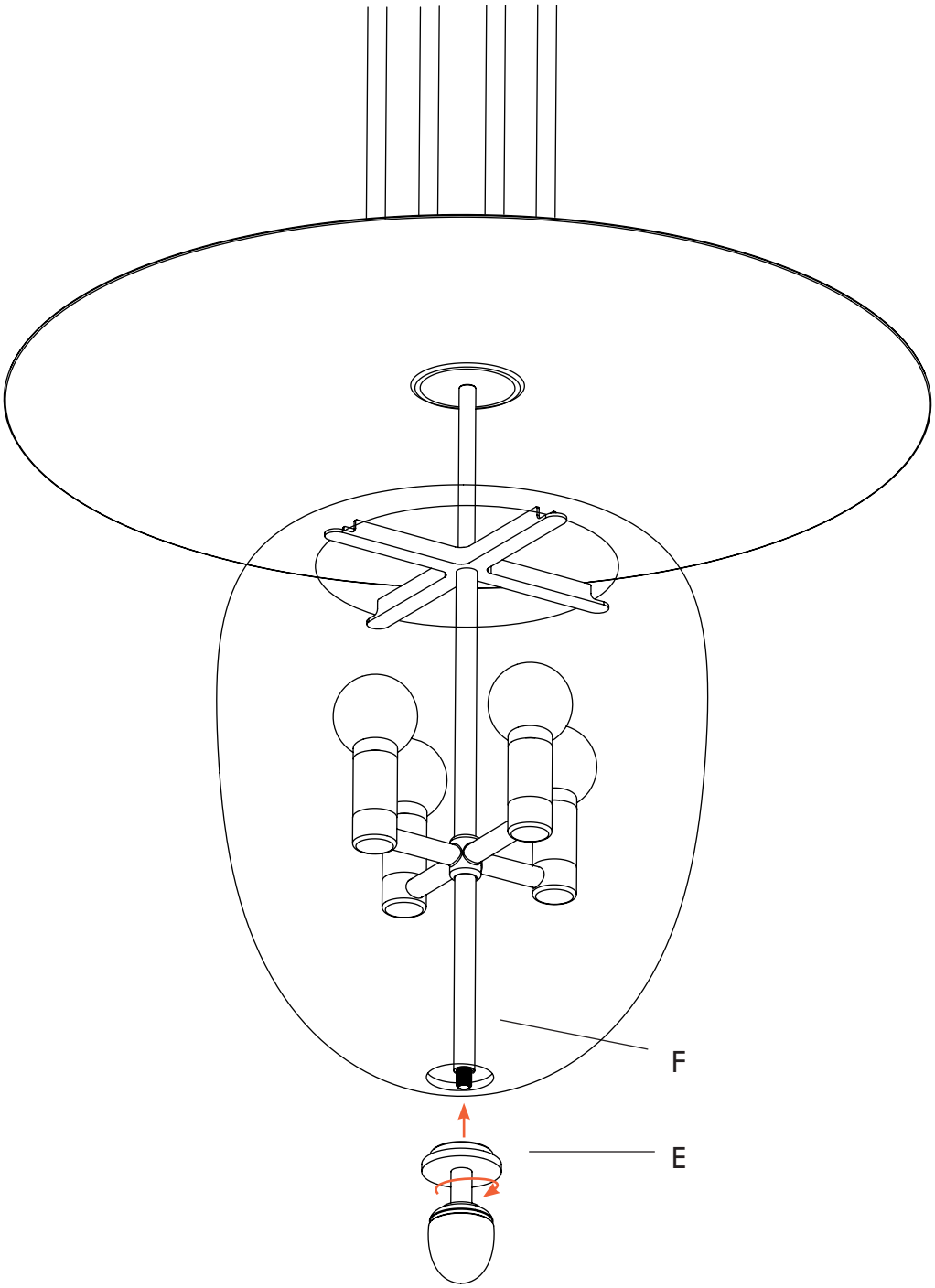
4. Screw in the bottom finial (E), into the bottom hub stem (F).
   DO NOT over-tighten the bottom finial, as the glass might break.