Roll & Hill

CONTENTS

Met Pendant Lighting Assembly

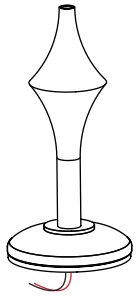

Threaded rod and cover tube

(x2) 8-32 Screw

(x7) Wago Connector

Wire spool

Canopy with crossbar assembly

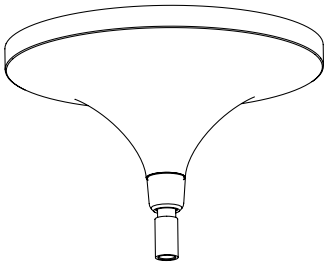

Hex Key

(x1) Glass (18in or 22in)

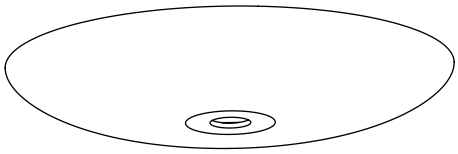

(x2) Toggle anchor
On 240V fixtures only

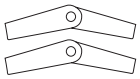

(x2) Wood screw
On 240V fixtures only

(x2) Long 8-32 screw
On 240V fixtures only

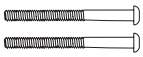

(x2) Metal screw
On 240V fixtures only

SAFETY INFORMATION

Suitable for dry or damp locations
Maximum ambient temperature: 25°C
The light source contained in this luminaire shall only be replaced by the manufacturer or his service agent or a similar qualified person

MET PENDANT | INSTALLATION

Stem length adjustment

Note: Please contact a licensed electrician.

Example fixture only:

To measure length of stem, first determine overall length (OAL), subtract 5” for the canopy height and subtract the fixture height from the OAL.
Fixture height is measured from bottom of the fixture to stem connection point.
The resulting measurement is the final stem length.

Ex. The fixture below has an OAL of 9” and a fixture height of 9”.
45” OAL - 5” canopy - 9” fixture height = 31” Stem

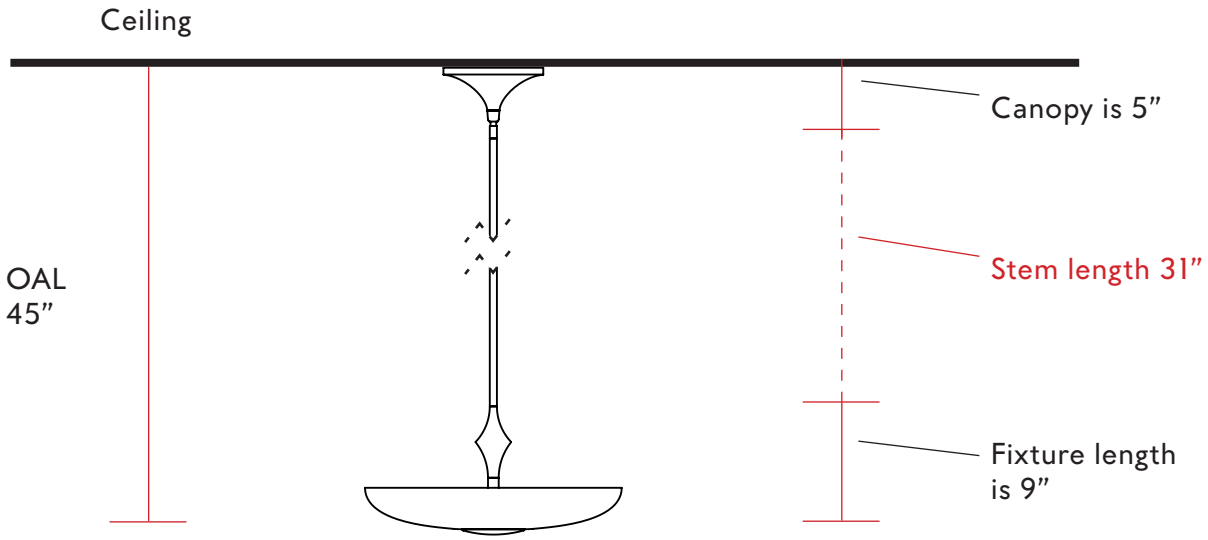

MET PENDANT | INSTALLATION

Stem and cover tube length adjustment

Note: Please contact a licensed electrician.

Example fixture only:

1. To customize the length of the provided stem, cut cover tube to desired length. Then cut the inner threaded tube so that it remains 3/4" longer than the cover tube.

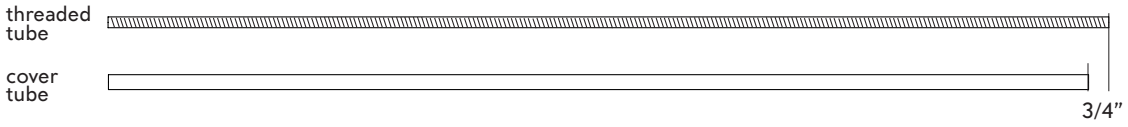

2. Mark the length of the tube required, using a marker or tape. Then hold down the tube with a hand or a clamp, use a hacksaw or electrical tool to cut the tube. Recommended to clean tube after cutting to remove any metal chippings.

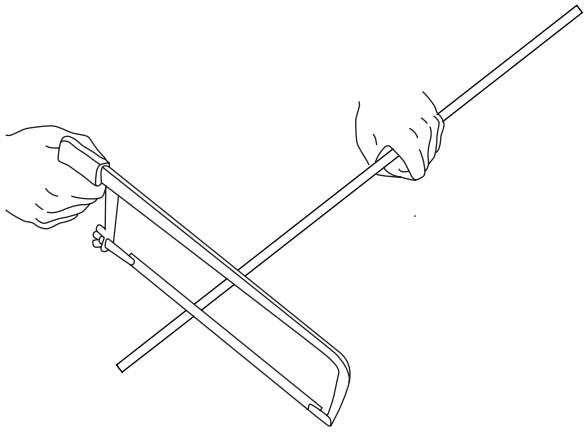

3. Now that the cover tube is cut to 31", measure the all thread tube to be 31 and 3/4" long. And place a mark, with a marker or tape.

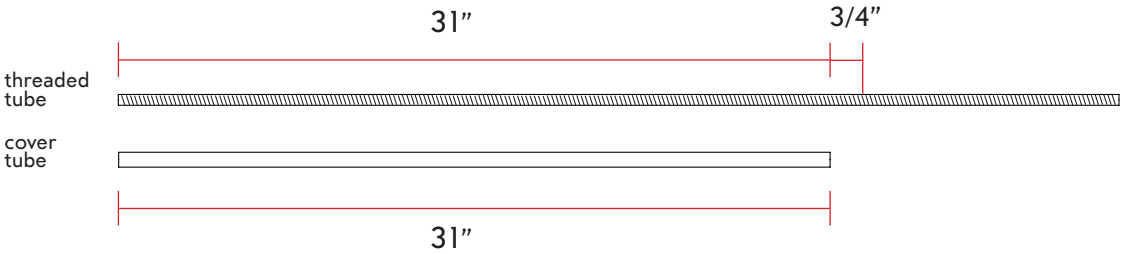

4. Hold down the all thread with a hand or a clamp, use a hacksaw or electrical tool to cut the all thread tube. Recommended to clean all thread tube after cutting to remove any metal chippings.

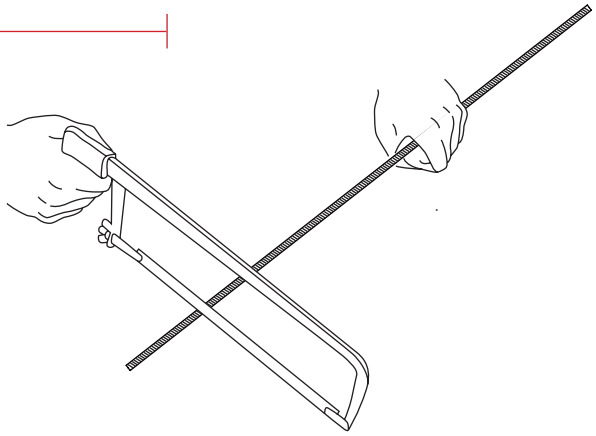

MET PENDANT | INSTALLATION

Note: Please contact a licensed electrician for installation. Ensure power is off during installation.

01. Unscrew the threaded hang-straight nut (A) from the canopy (B), to release the crossbar assembly (C).
02. Unscrew the glass cap (D) from the main fixture body (E).
03. Unscrew the two hex screws (F) to release the bracket (G).

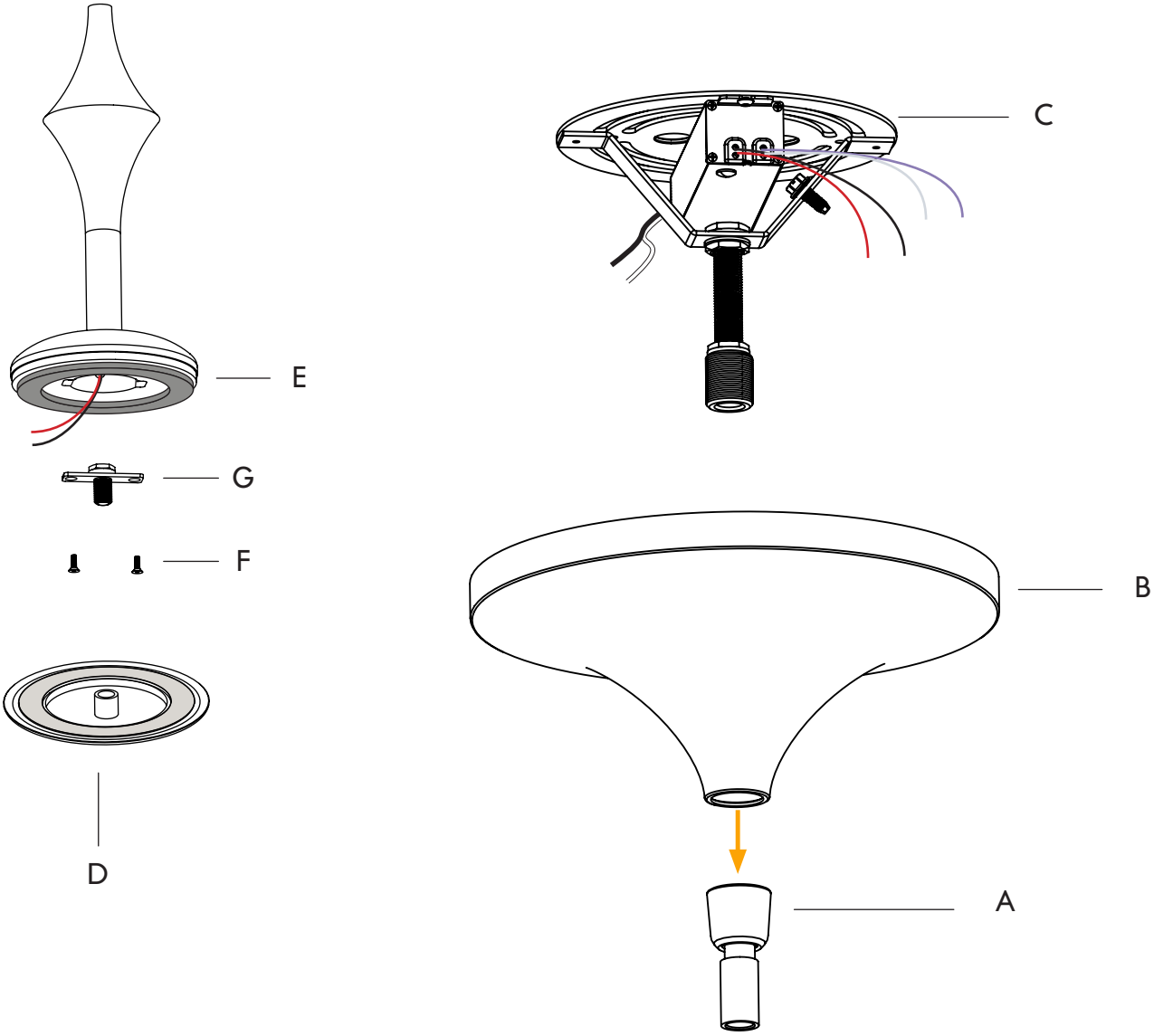

MET PENDANT | INSTALLATION

Note: Please contact a licensed electrician for installation. Ensure power is off during installation.

04. Take the provided spool of low voltage wires (H) and pull it through the crossbar assembly nipple (I).
05. Make the low voltage wire connection with the provided 2-port wagos (J).
06. Bring the crossbar assembly (C) up to the J-box (K), and make lead wire connection with provided 2-port wagos (L),
07. Make the ground wire connection with the provided 2-port wago (M).
08. Pull the dimming wires from the J-box, through the center hole of the crossbar assembly, Then secure the crossbar assembly to J-box using the two provided screws (N) Be sure to tuck the lead wire and ground wire connections inside the J-box.
09. Optional: make the dimming connection with the provided 2-port wagos (O).

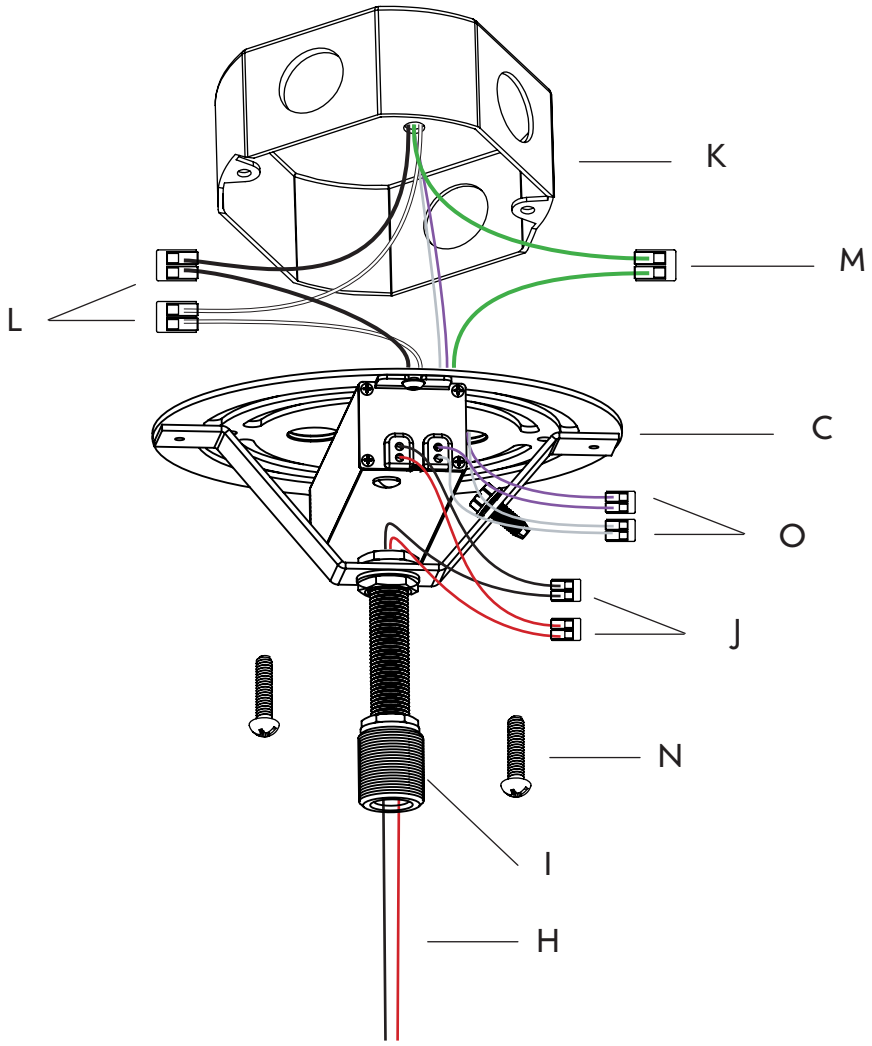

MET PENDANT | INSTALLATION

Note: Please contact a licensed electrician for installation. Ensure power is off during installation.

10. Next, pull the low voltage wires (H) from the crossbar assembly (C), through the canopy (B) and threaded hang-straight nut (A).
11. Tuck the low votage wire connections and the dimming wire connections inside the canopy (B), and secure the canopy over the crossbar assembly with threaded hang-straight nut.

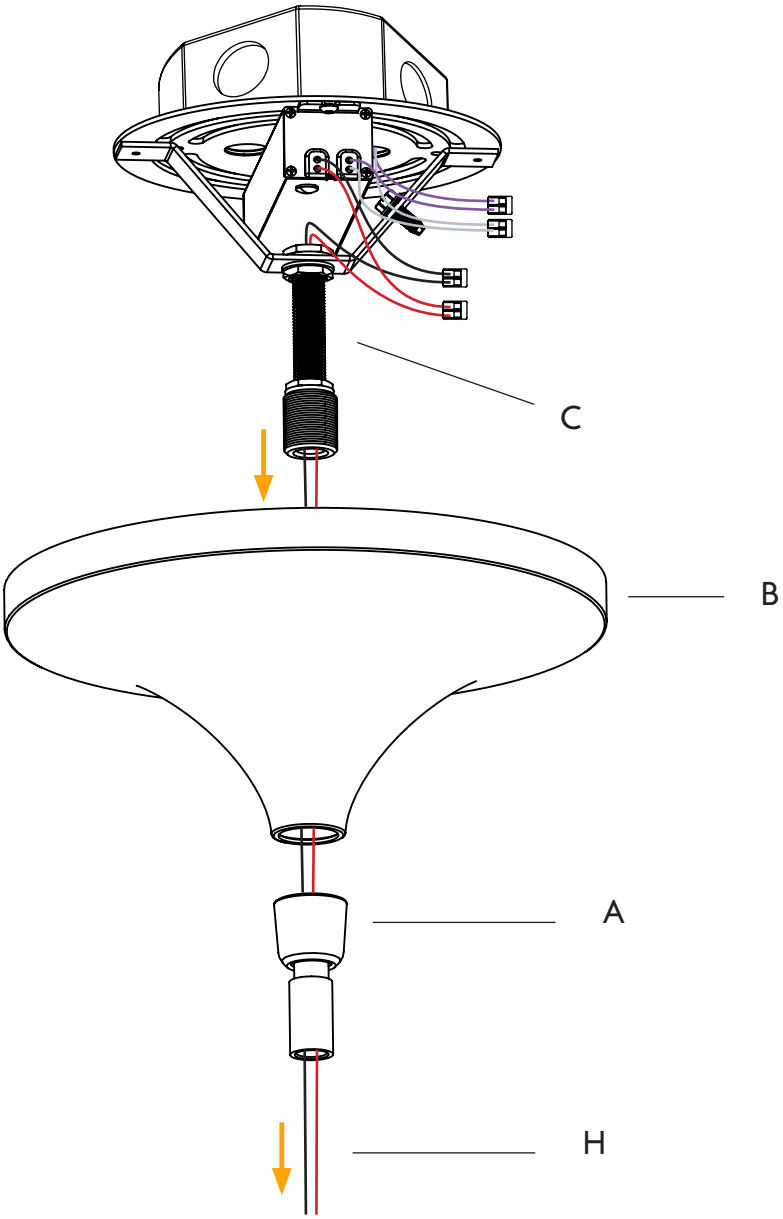

MET PENDANT | INSTALLATION

Note: Please contact a licensed electrician for installation. Ensure power is off during installation.

11. Pull the low voltage wires (H) from the canopy (B), through the threaded rod (P), and cover tube (Q), and screw in the threaded rod into the hang-straight nut (A)
12. Then pull the low voltage wires (H) through the fixture assembly (E) and screw in the fixture assembly onto the threaded rod.

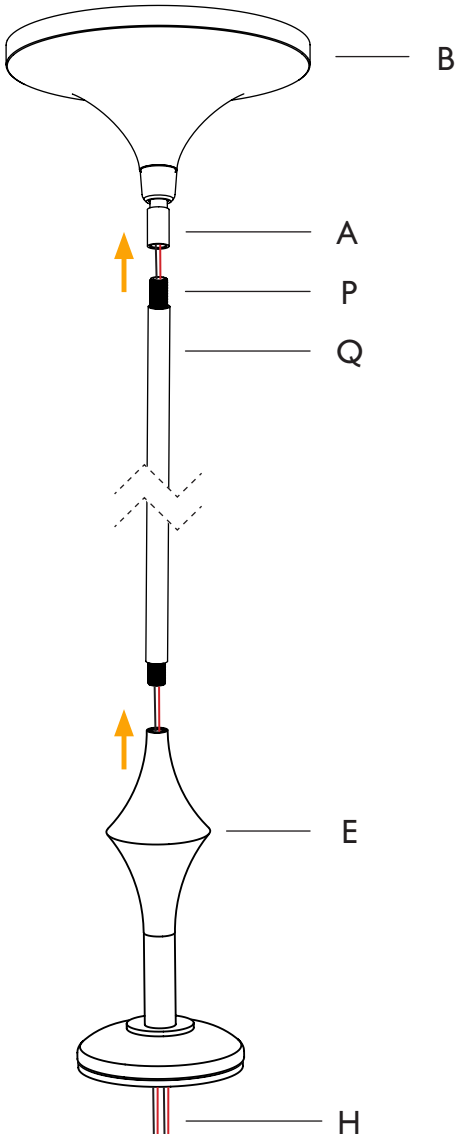

MET PENDANT | GLASS INSTALLATION

Note: Please contact a licensed electrician for installation. Ensure power is off during installation.

13. Cut the low voltage wires to 1-2in and make the connection with the provided 2-port wagos (P). Once connected, tuck in the wagos inside the crevice space.
14. Then secure the bracket (G) with the two hex screws (F). Make sure that each connected wire set is on opposite side of the bracket to fit the wagos, see diagram 1 below.

Diagram 1

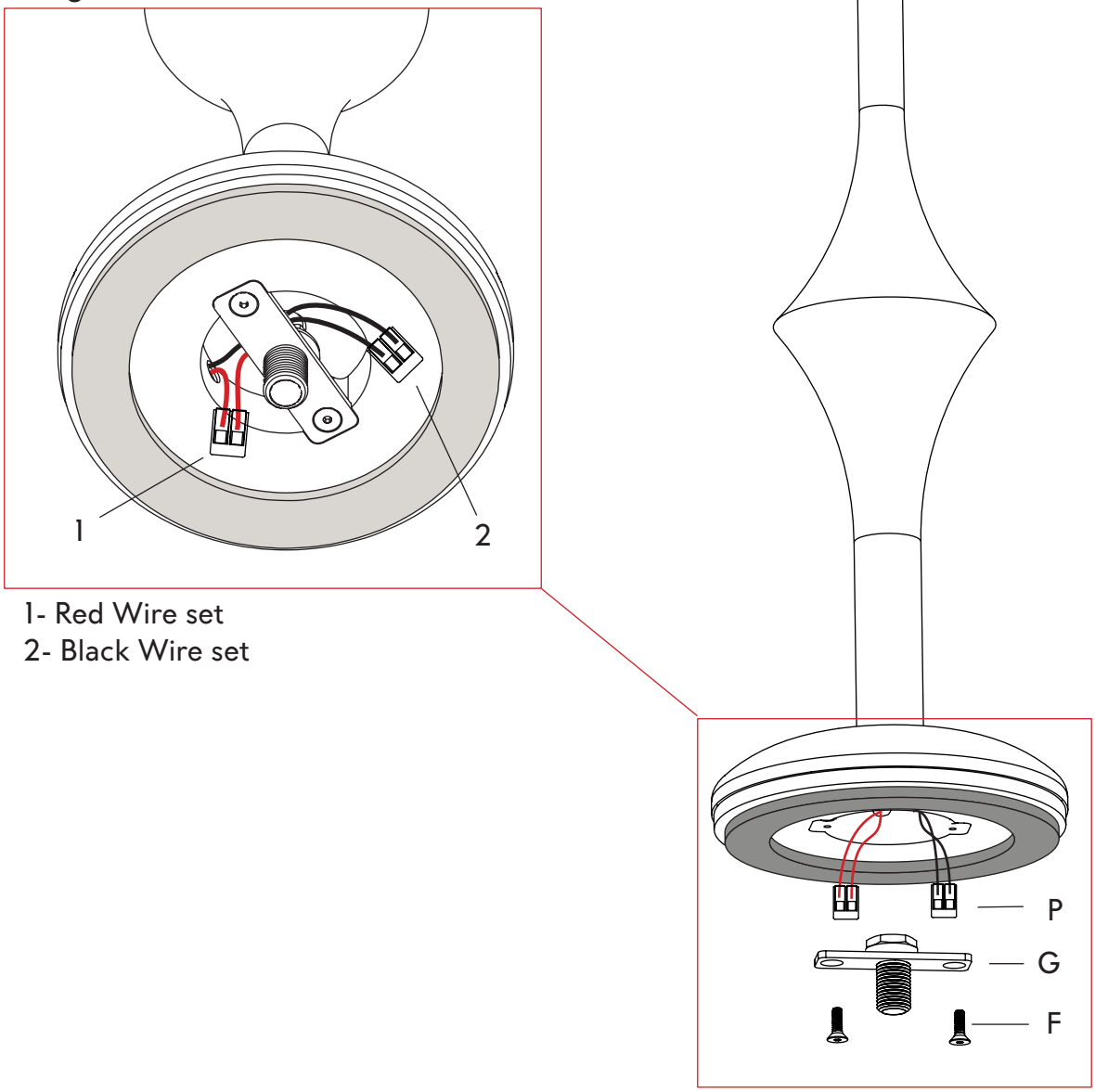

1- Red Wire set
2- Black Wire set

MET PENDANT | GLASS INSTALLATION

Note: Please contact a licensed electrician for installation. Ensure power is off during installation.

14. Install the Glass shade (R), by aligning the hole on the glass, with the threaded nipple (S) on the fixture. Then secure the glass with a glass cap (D).
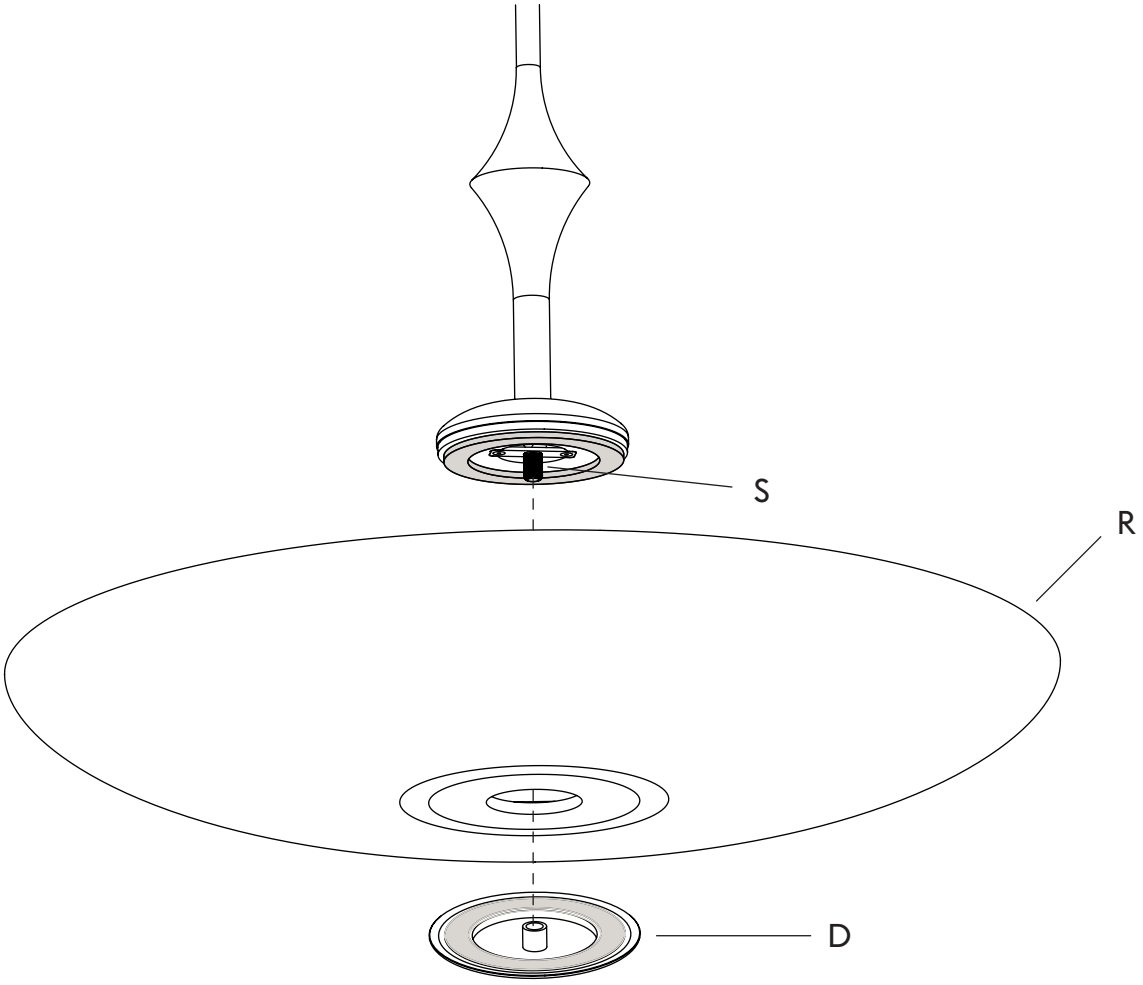
NOTE: while screwing in the glass cap, some adjustments to the glass may be needed to center it in order for the glass to be leveled.