Roll & Hill

CONTENTS

Pearl Sconce glass

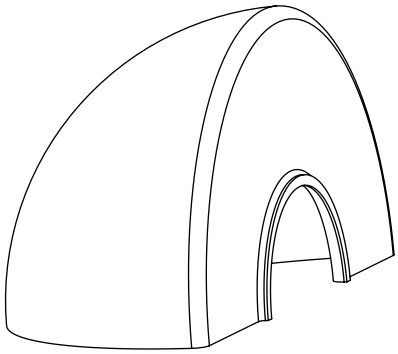

(x2) 8-32 J box Screw

(x7) Wago Connectors

Crossbar with ground screw

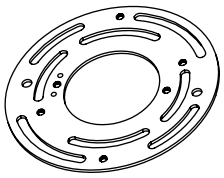

(x2) Button head Screw

Pearl Sconce body (120V/240V)

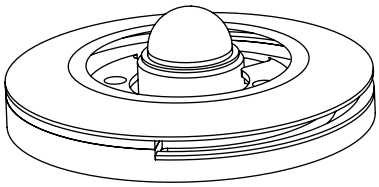

Diffuser glass

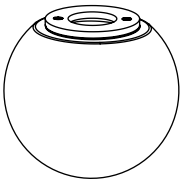

3/32" hex driver

5.64" hex driver

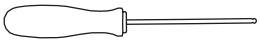

Driver

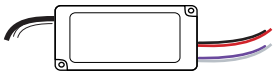

(x4) Toggle anchor
(240V only)

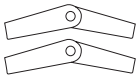

(x4) Metal screw
(240V only)

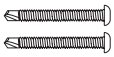

Driver Box
(240V only)

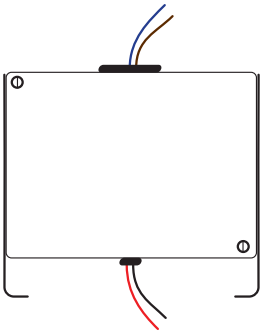

(x4) Wood screw
(240V only)

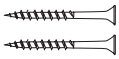

(x4) Long 8-32 screw
(240V only)

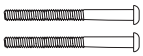

SAFETY INFORMATION

Maximum ambient temperature: 25°C
The light source contained in this luminaire shall only be replaced by the manufacturer or his service agent or a similar qualified person.

PEARL SCONCE (120V) | INSTALLATION

Note: Please contact a licensed electrician.

1. Unscrew two button head screws (A) using 3/32" hex key (B) from the main body (C) to release the crossbar (D).

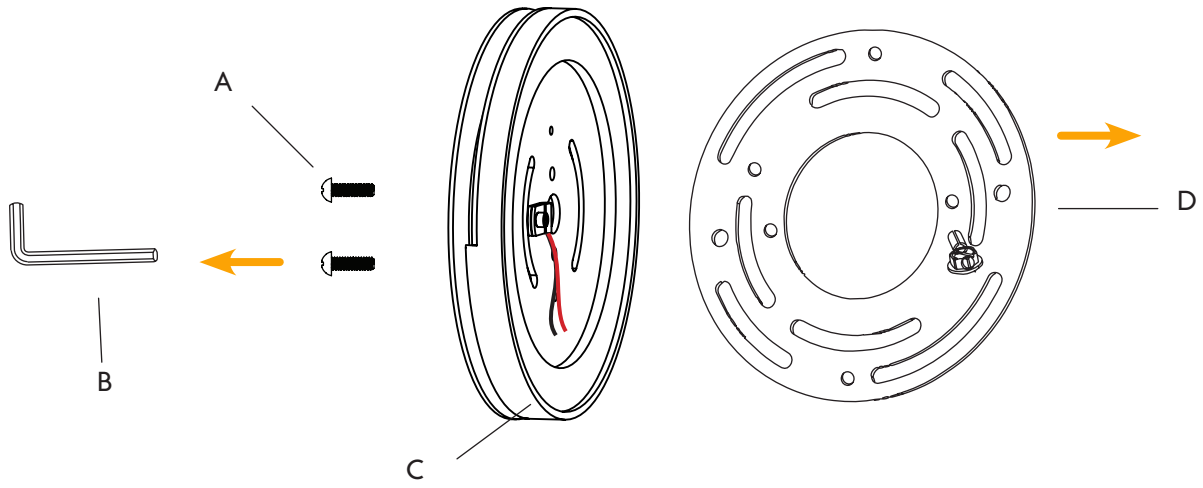

2. Unscrew two flat head screws (E) using 5/64" hex key (F) to release the top plate (G) from the main body (C).

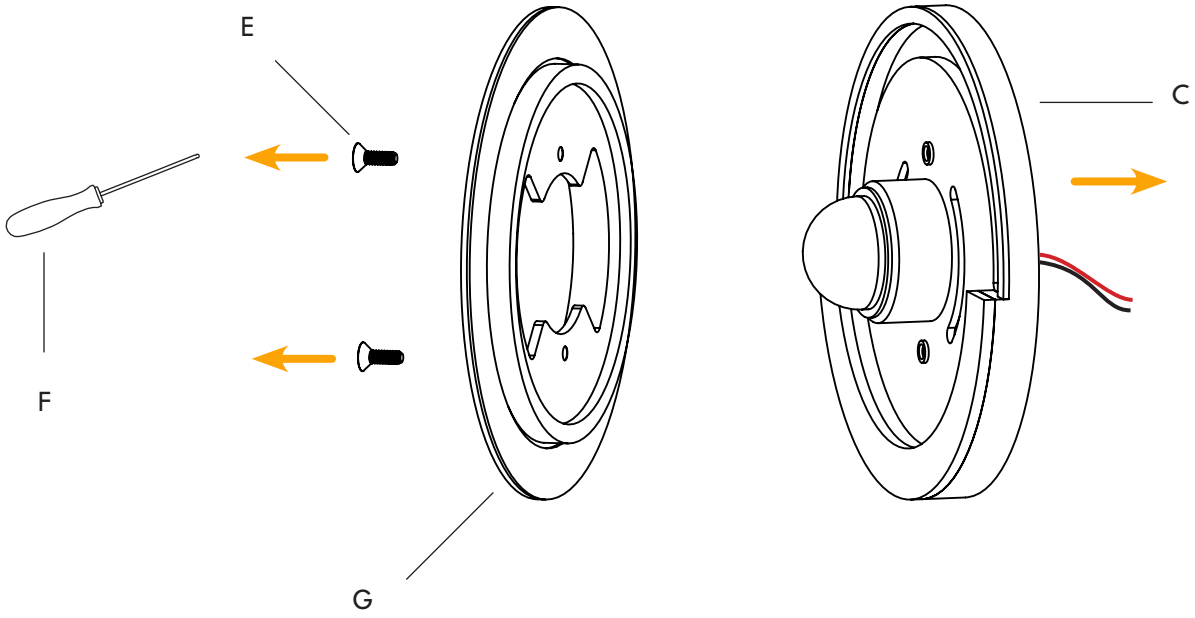

PEARL SCONCE (120V) | INSTALLATION

3. Fit the glass (H) inside the channel of the main body (C), than apply the top plate (G), and secure with the two flat head screws (E) using 5/64" hex driver (F)

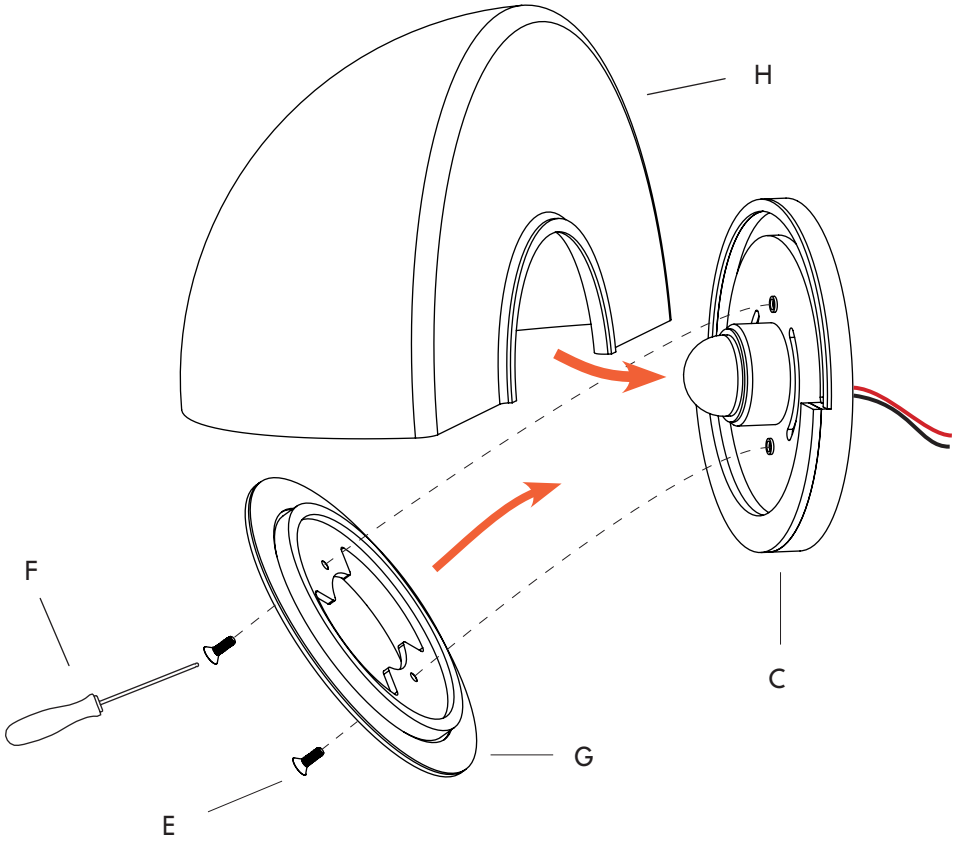

3. The attached glass on the fixture should look like the image below

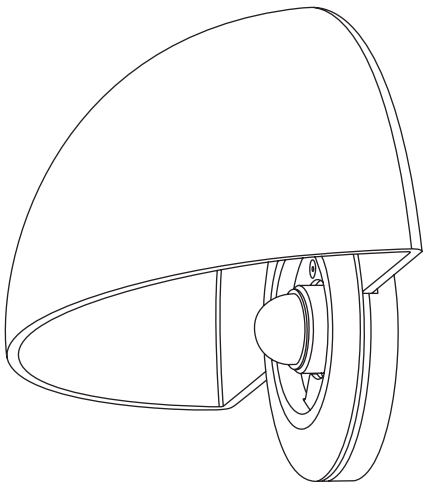

PEARL SCONCE (120V) | INSTALLATION

Note: Please contact a licensed electrician.

04. Take the LED driver (I), and connect the lead wires with the provided 2-port wagos (J) from the J-box (K).
05. Optional, make the dimming wire connection (L) with the provided 2-port wagos.
06. Fit the LED driver inside the J-box and tuck in the connected wires.

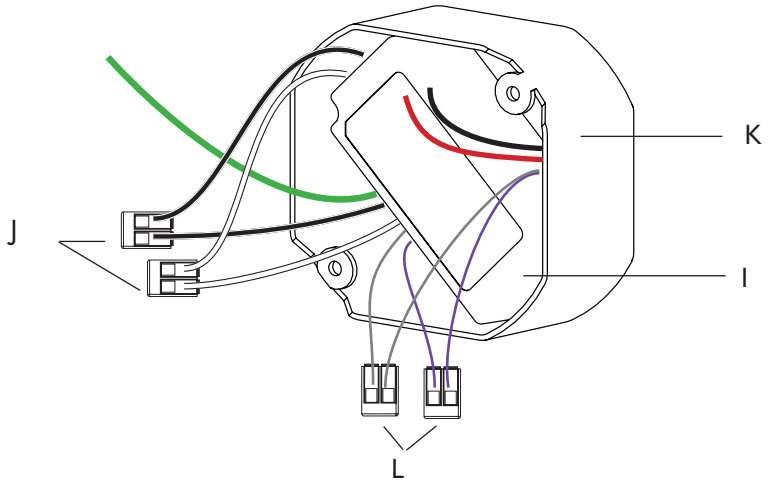

07. Bring the crossbar (D) up to the J-box (K), and make the ground wire connection using the provided 2-port wago (M).
08. Pull the low voltage wires through the center hole of the crossbar. Then tuck the connected wires into the J-box, and secure the crossbar to J-box with two 8-32 screws (N). Make sure to leave love voltage wires out.

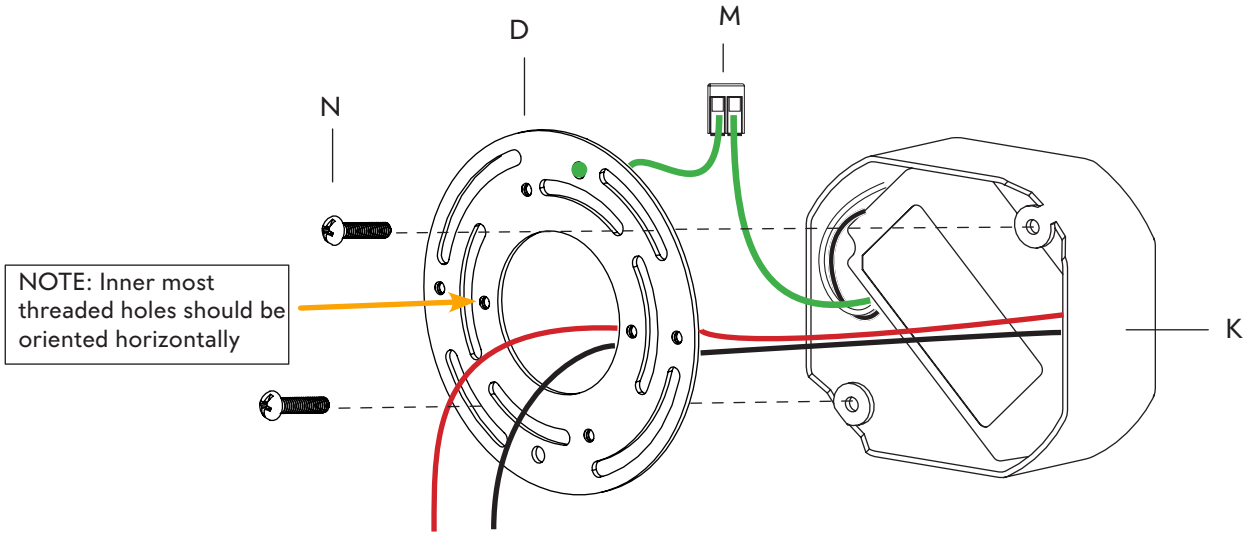

PEARL SCONCE (120V) | INSTALLATION

Note: Please contact a licensed electrician.

09. Bring the sconce (O) up to the J-box (K), and make the low voltage wire connection (P) with the provided 2-port wagos.

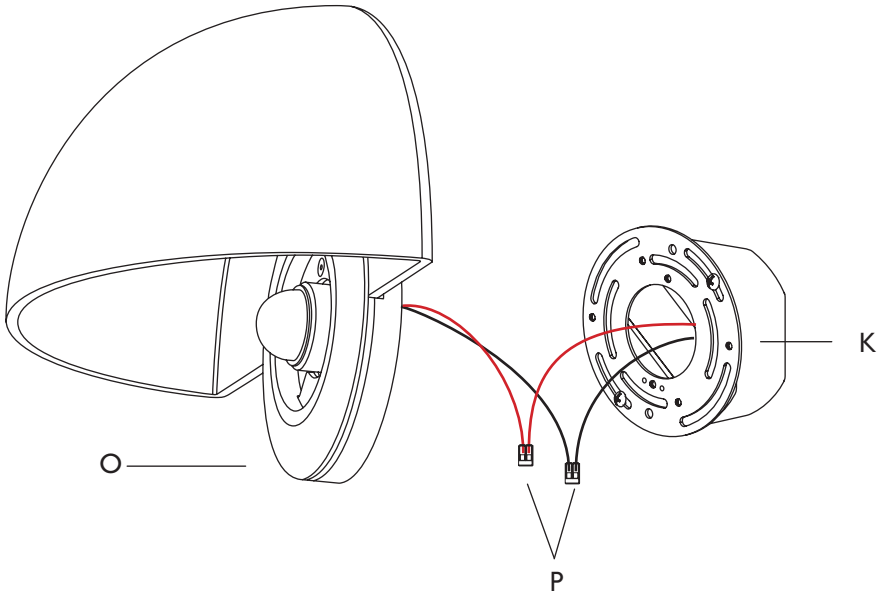

10. Tuck the low voltage wires back into the J-box. Then secure the sconce (O) to the crossbar (D) with two button head screws (A) using a 3/32" hex key (B). Be sure not to pinch any wires.

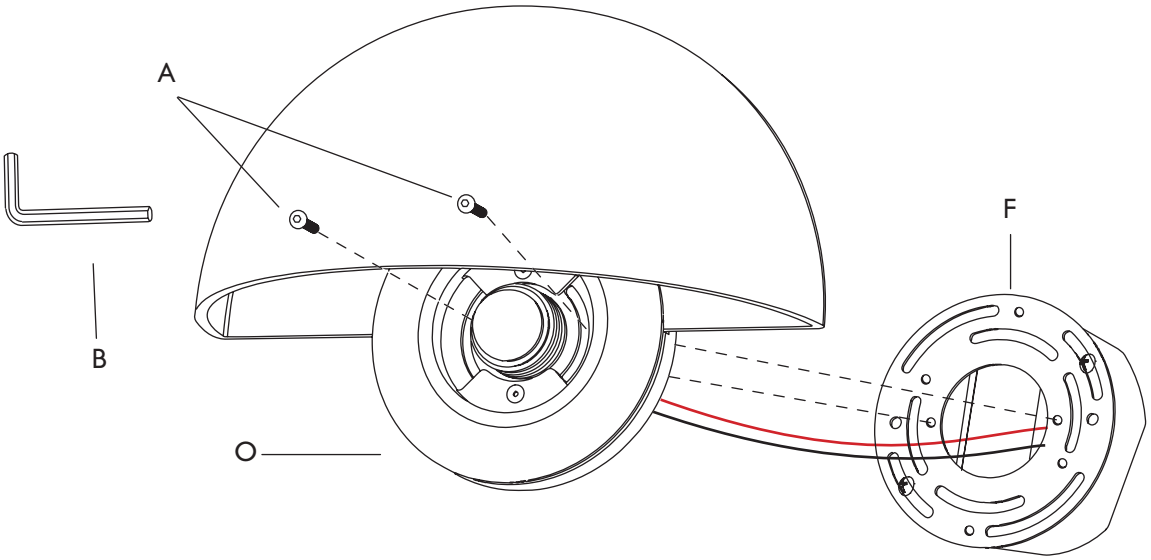

PEARL SCONCE (120V) | INSTALLATION

Note: Please contact a licensed electrician.

11. Fit the glass (Q) onto the sconce LED mount (R) and secure it by screwing it on in a clockwise direction.

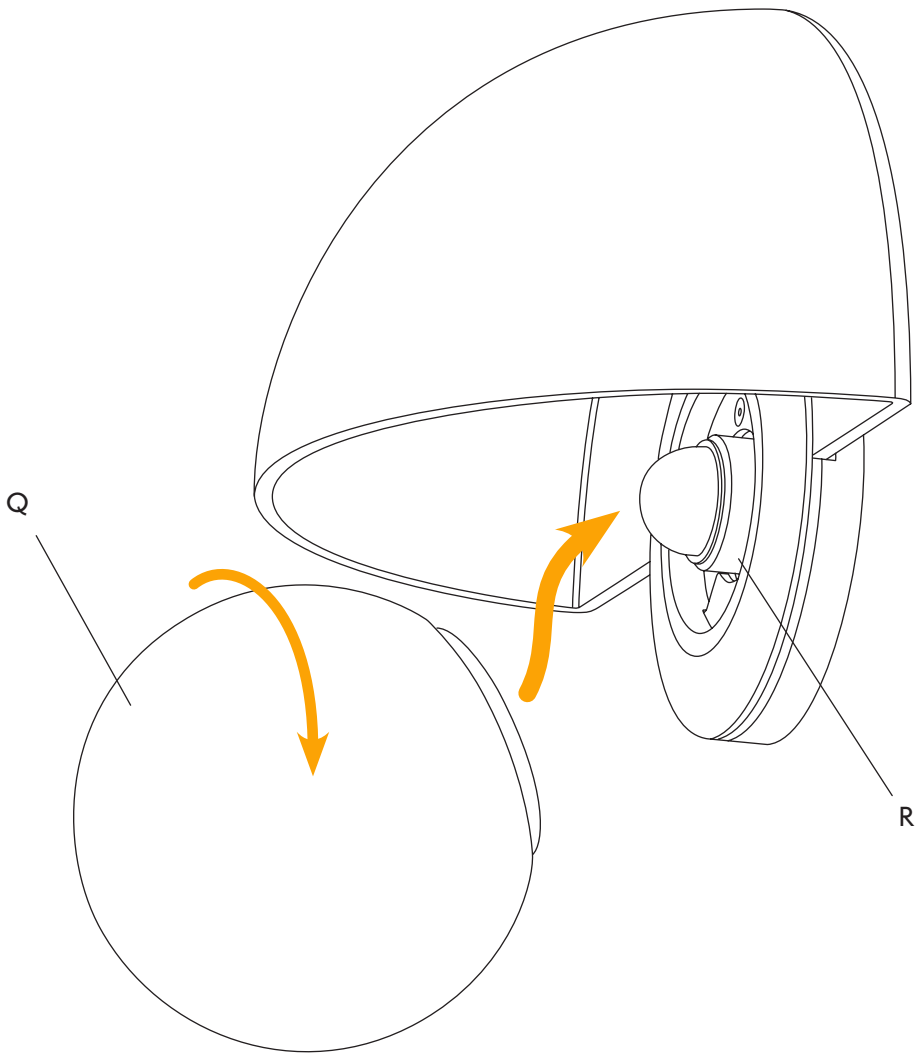

PEARL SCONCE (240V) | INSTALLATION

Note: Please contact a licensed electrician.

1. Unscrew two button head screws (A) using 3/32 “hex key (B) from the main body (C) to release the crossbar with driver enclosure (D).

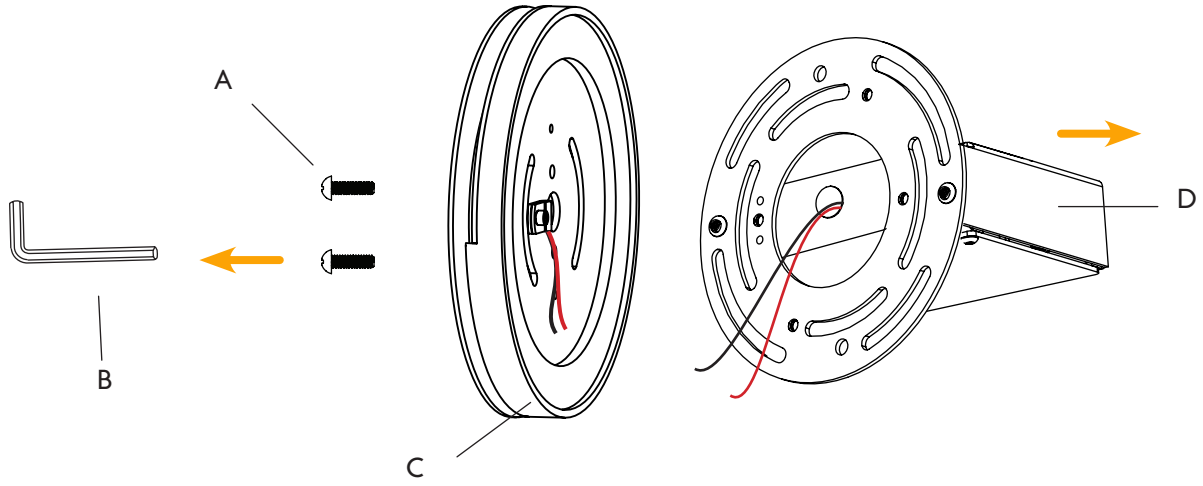

2. Unscrew two flat head screws (E) using 5/64 hex key (F) to release the top plate (G) from the main body (C).

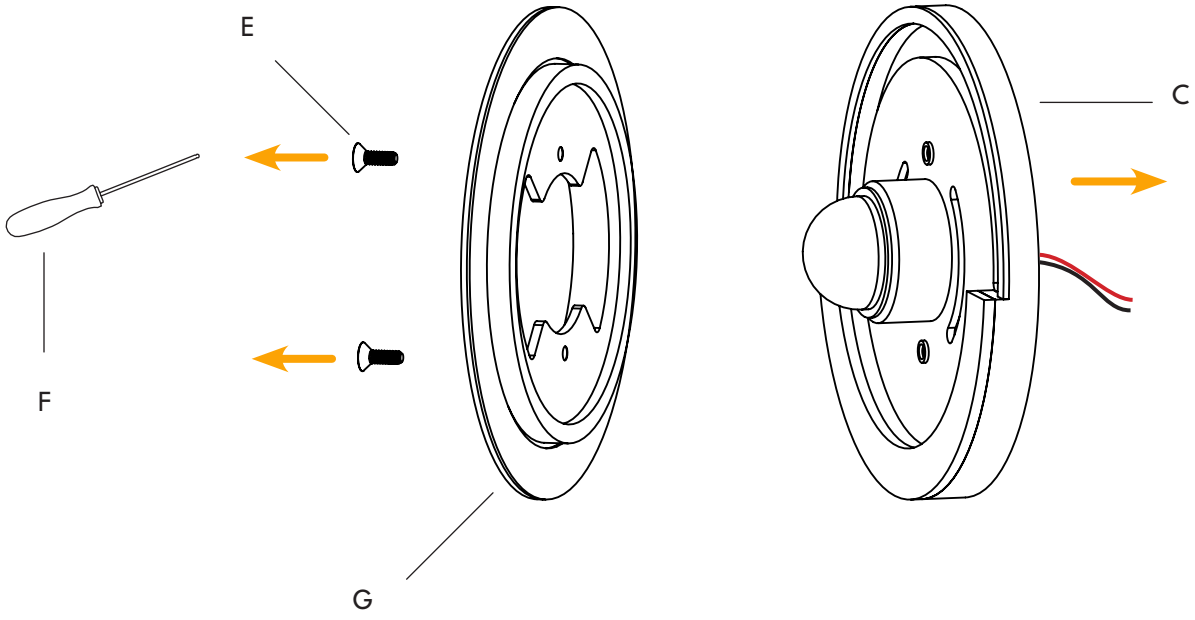

PEARL SCONCE (240V) | INSTALLATION

3. Fit the glass (H) inside the channel of the main body (C), than apply the top plate (G), and secure with the two flat head screws (E)

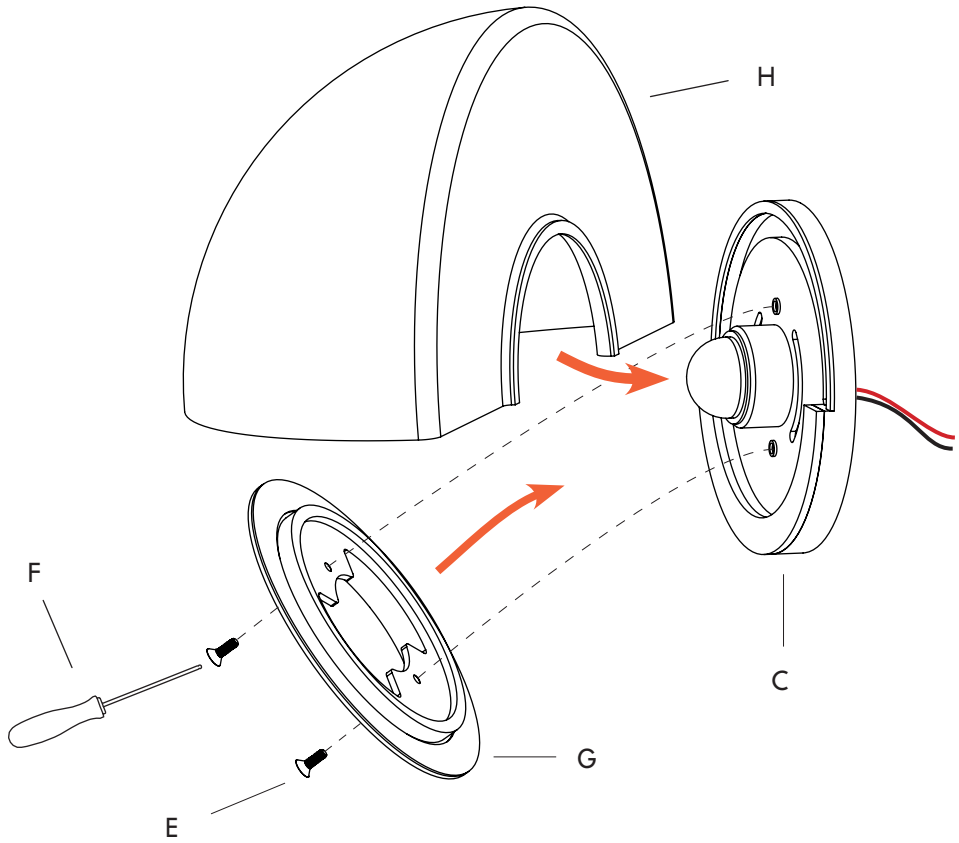

3. The attached glass on the fixture should look like the image below

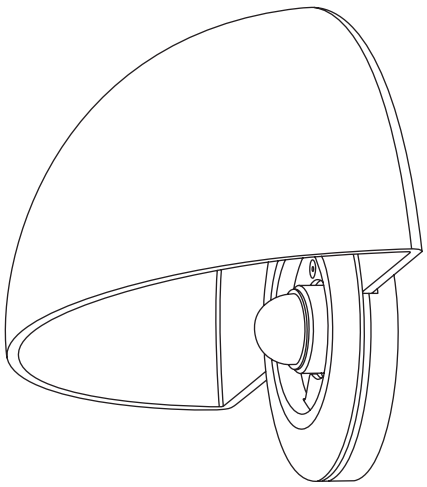

PEARL SCONCE (240V) | INSTALLATION

Note: Please contact a licensed electrician.

4. Connect the lead wires (I) to the power supply wires.
5. Optional: Make the dimming wires connection (J) with the provided 2-port wagos.
6. Mount the crossbar to the wall using the provided 240V screws (K).

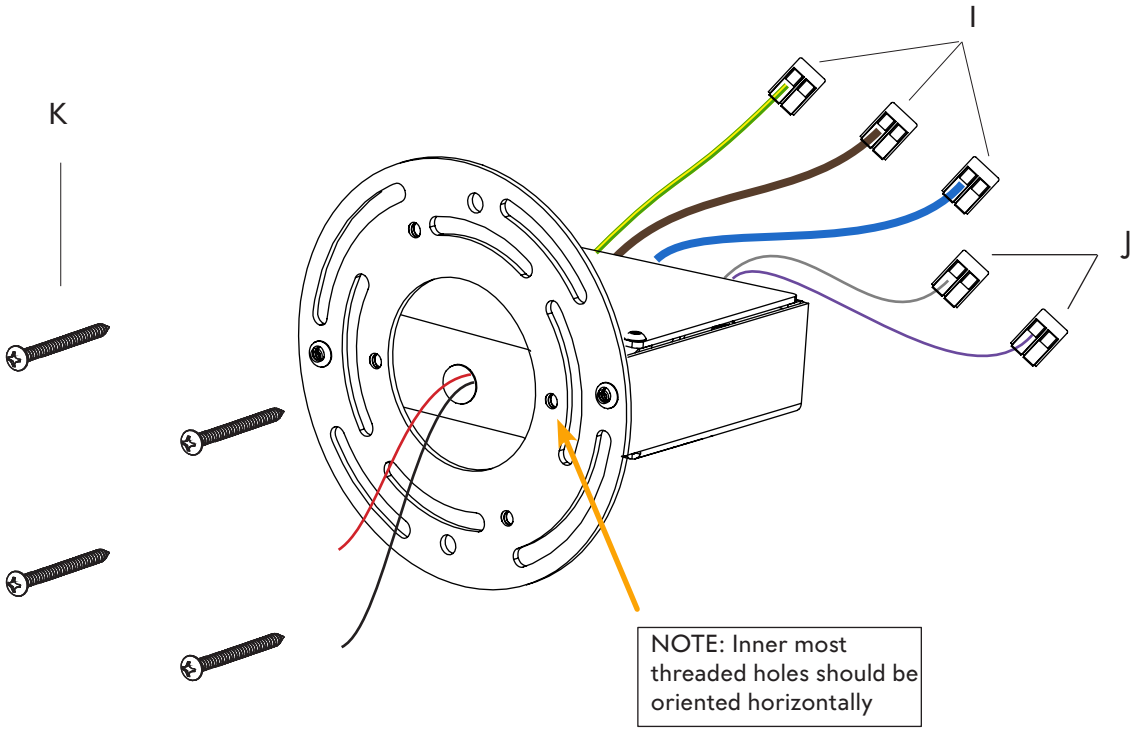

PEARL SCONCE (240V) | INSTALLATION

Note: Please contact a licensed electrician.

7. Bring the sconce base (L) up to the crossbar (D), and make the low voltage wire connection (M) with the provided 2-port wagos. Then tuck in the wires behind the crossbar.

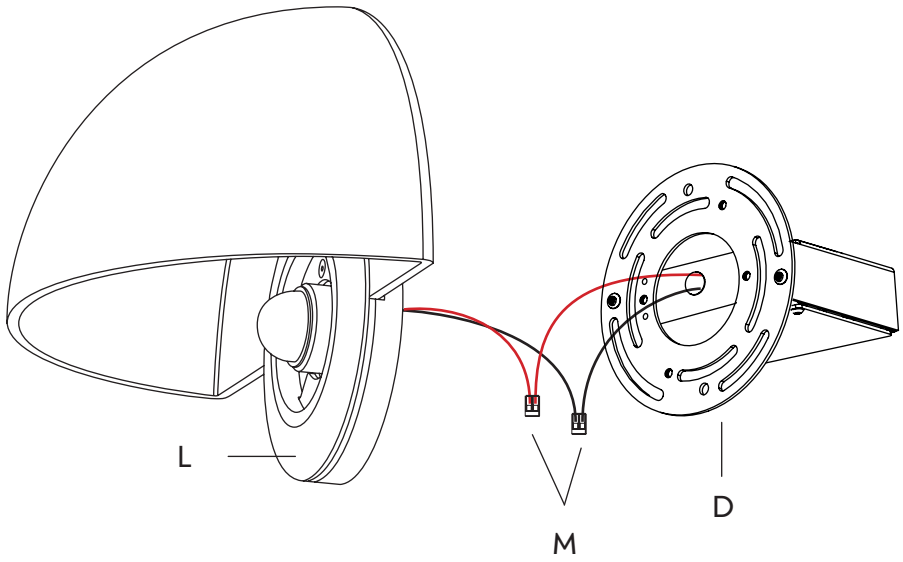

8. Secure the sconce base (L) to the crossbar (D) with two button head screws (A) using a 3/32" hex key (B). Be sure not to pinch any wires.

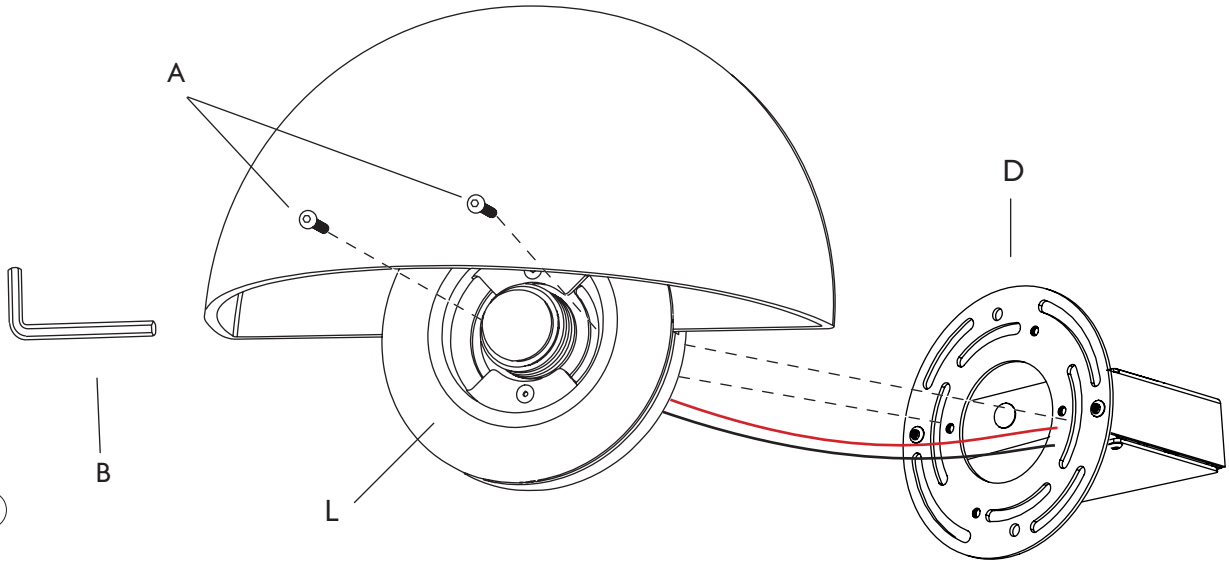

PEARL SCONCE (240V) | INSTALLATION

Note: Please contact a licensed electrician.
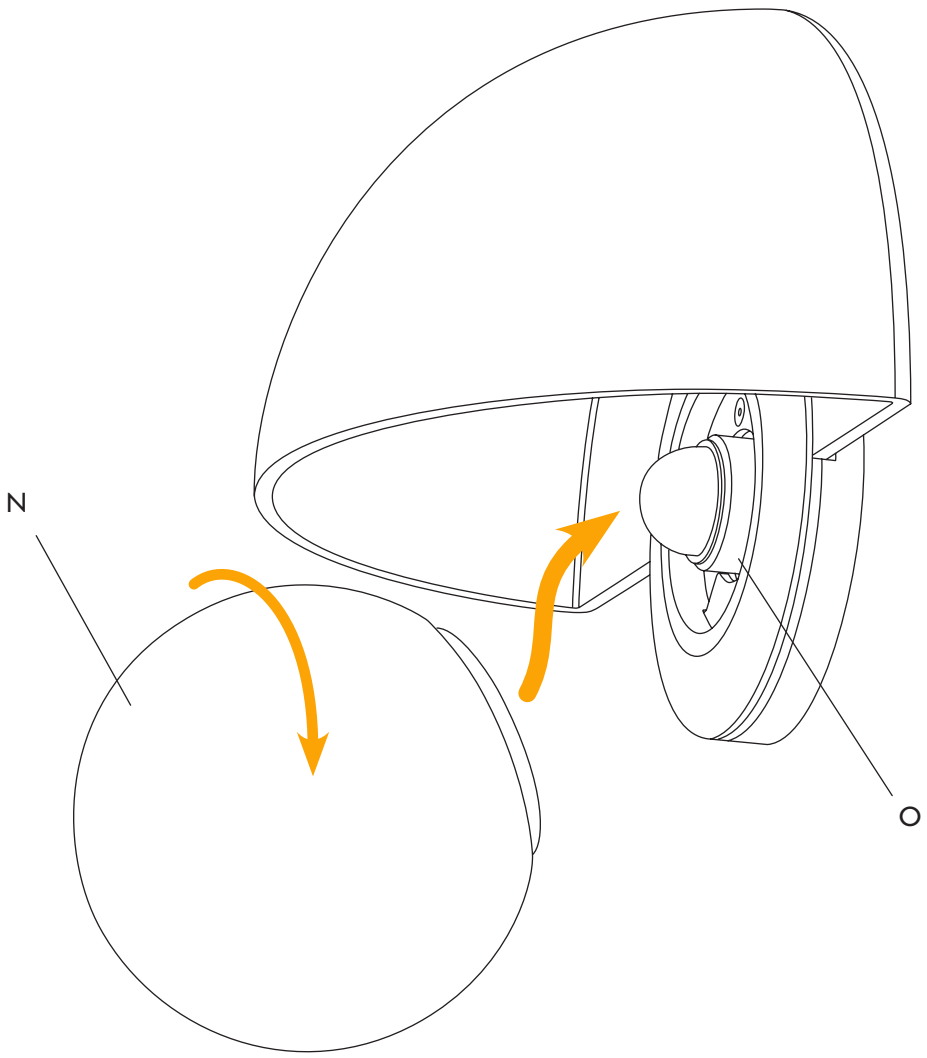
9. Fit the glass (N) onto the sconce LED mount (O) and secure it by screwing it on in a clockwise direction.