Roll & Hill

CONTENTS

Memori Trid Sconce (120V/240V)

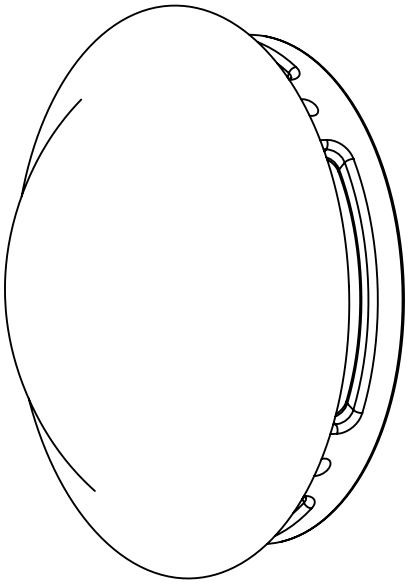

(x2) 8-32 J box Screw

(x7) Wago Connectors

(x2) Hex head Screw

(x2) Sealing washers

LED assembly back plate

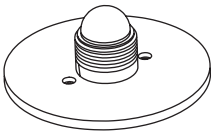

Crossbar with ground screw

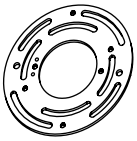

Hex Key

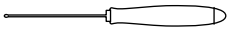

Driver

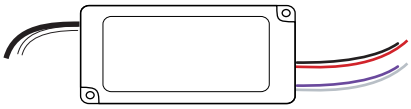

(x4) Toggle anchor
(240V only)

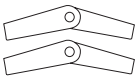

(x4) Metal screw
(240V only)

(x4) Wood screw
(240V only)

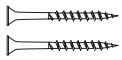

(x4) Long 8-32 screw
(240V only)

Driver Box
(240V only)

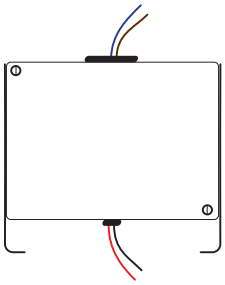

(NOT INCLUDED)
Silicone/Caulk for
outdoor installation

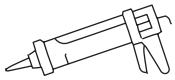

SAFETY INFORMATION

UL/Outdoor wet rated.
The light source contained in this luminaire shall only be replaced by the manufacturer or his service agent or a similar qualified person.

MEMORI TRID SCONCE (120V) | INSTALLATION

Note: Please contact a licensed electrician.

01. Take the LED driver (A), and connect the lead wires with the provided 2-port wagos (B) from the J-box (C).
02. Optional, make the dimming wire connection (D) with the provided 2-port wagos.
03. Fit the LED driver inside the J-box and tuck in the connected wires.

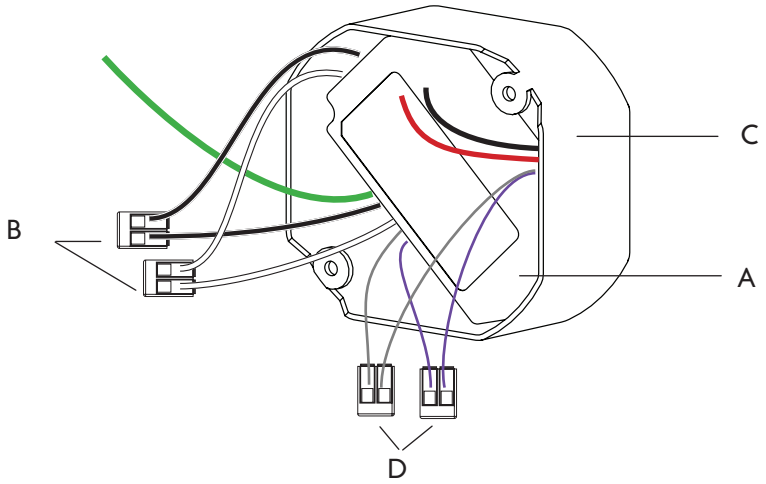

04. Bring the crossbar (E) up to the J-box (C),
05. Pull the low voltage wires through the center hole of the crossbar. Then tuck in the lead wires and dimming wires into the J-box, and secure the crossbar to J-box with two 8-32 screws (F).

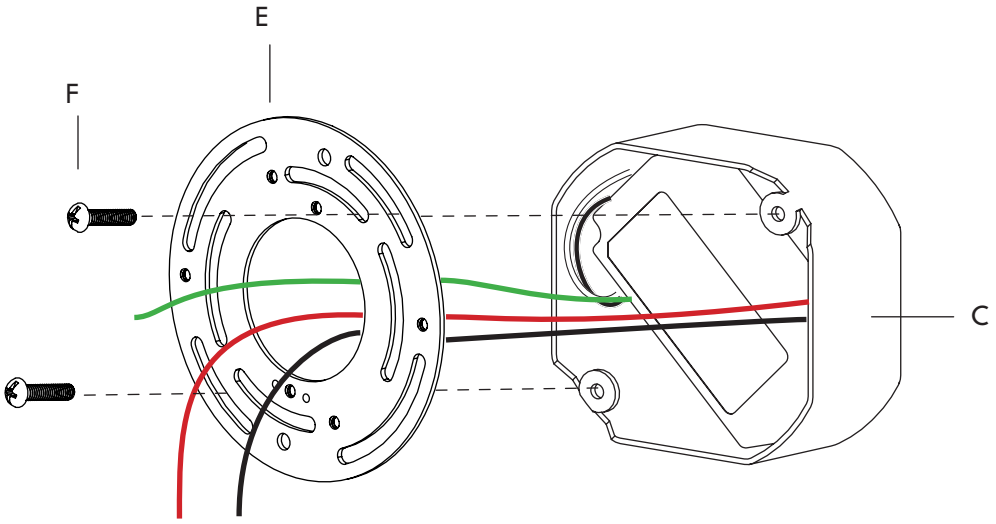

MEMORI TRID SCONCE (120V) | INSTALLATION

Note: Please contact a licensed electrician.

06. Bring the LED assembly backplate (H) up to the Crossbar (E), make the ground wire connection with the provided 2 port wago (G).
07. And make the low voltage wire connection (I) with the provided 2-port wagos.

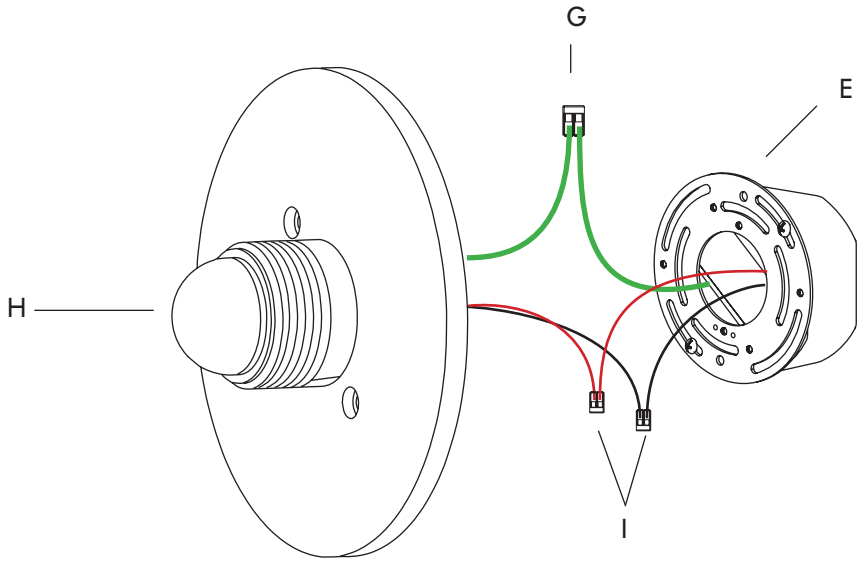

08. Tuck the low voltage wires back into the J-box. Then secure the LED assembly backplate (H) to the crossbar (E) with two hex head screws and sealing washers (J and K). Be sure not to pinch any wires.

NOTE: If this fixture is installed outdoors, ensure that screws (J) are sufficiently tightened.

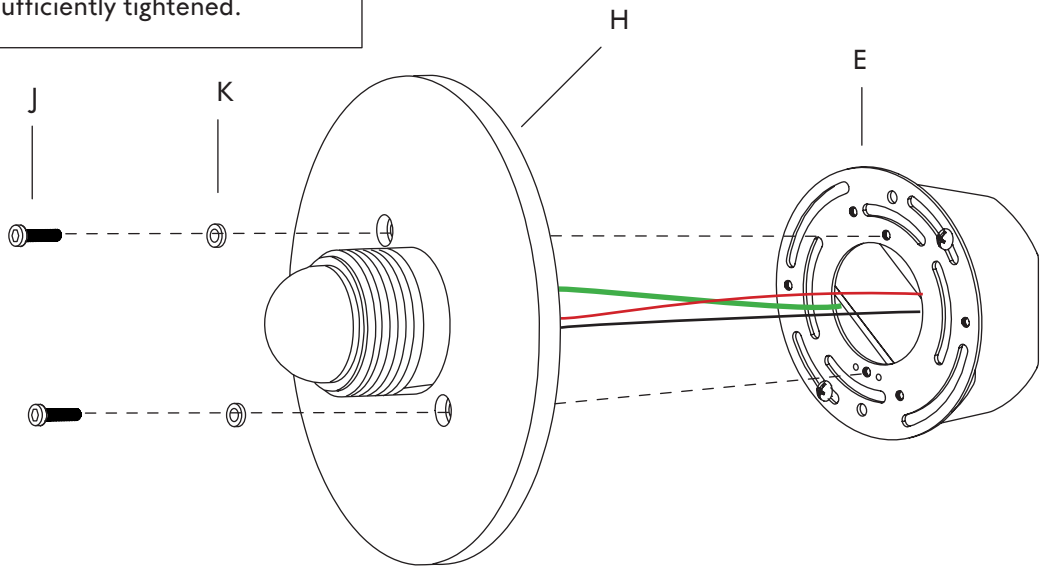

MEMORI TRID SCONCE (120V) | INSTALLATION

Note: Please contact a licensed electrician.

Outdoor installation.

09. Once the LED assembly backplate has been fully installed onto the wall, apply a layer of waterproof construction sealant (silicone/caulk) around the space between the backplate and the wall, around the entire fixture, closing any gaps.

Side View

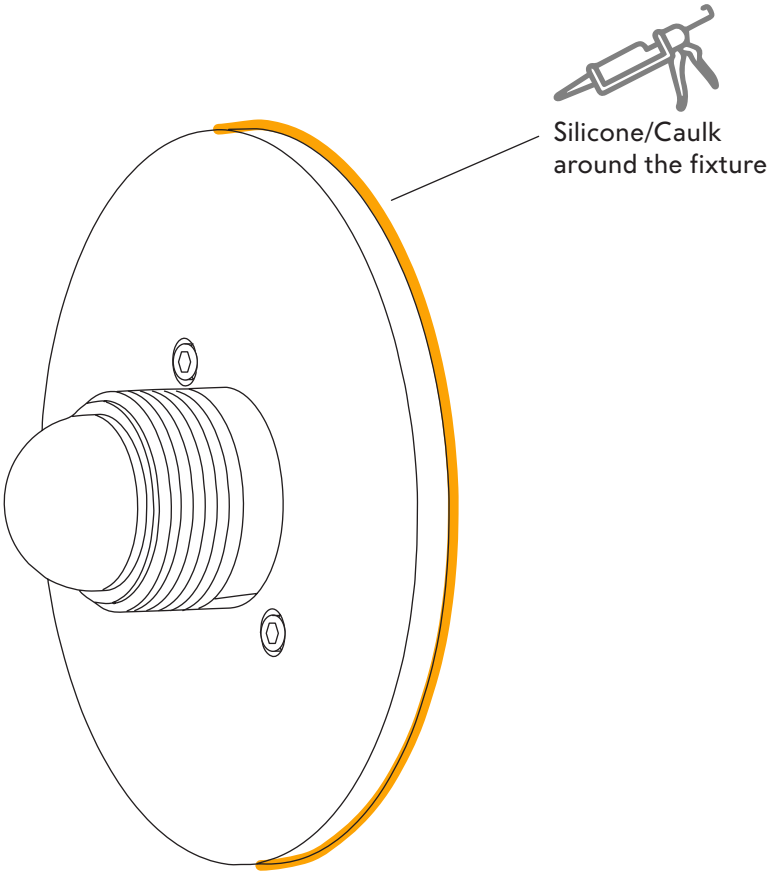

MEMORI TRID SCONCE (120V) | INSTALLATION

Note: Please contact a licensed electrician.

10. Finally, bring the ceramic assembly (L) to the installed LED assembly (H), align the threaded LED mount with the threaded fitter on the ceramic assembly.
11. Then secure the ceramic assembly on the LED assembly plate by screwing on the ceramic assembly onto the LED, rotating it clockwise. Recommended to use two hands.

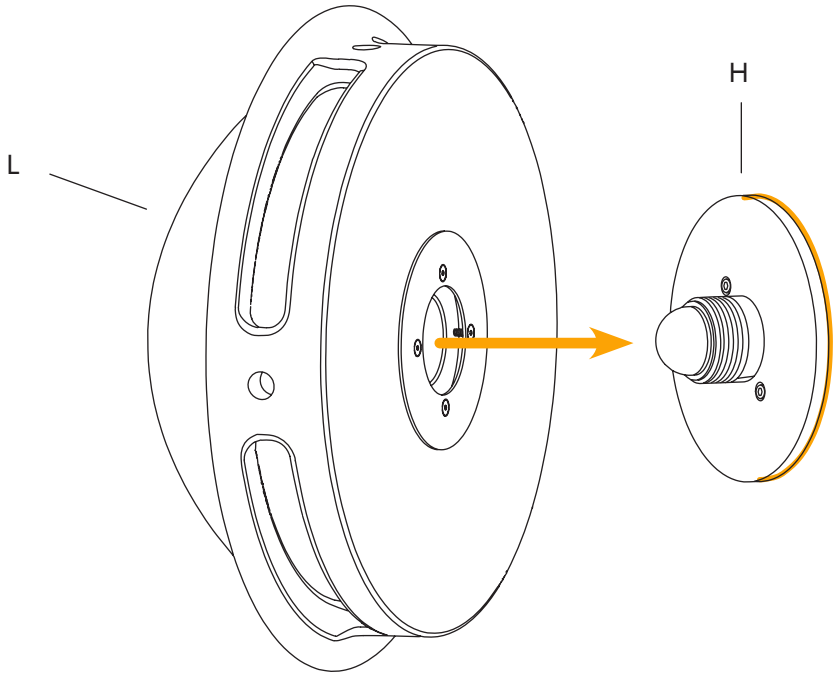

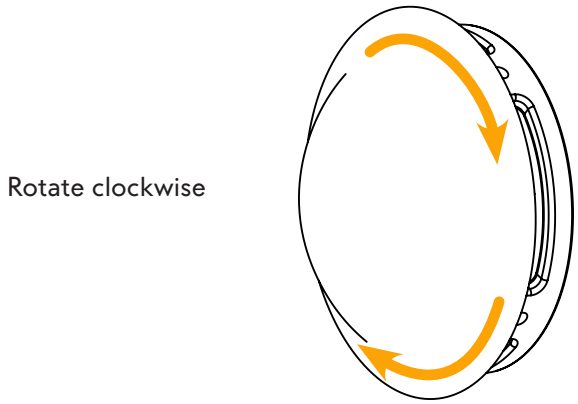

MEMORI TRID SCONCE (240V) | INSTALLATION

Note: Please contact a licensed electrician.

01. Unscrew the LED assembly back plate (A) from the 240V crossbar assembly (B) by unscrewing the two hex head screws (C) with the provided hex driver, be sure not to loose washers (D).
02. Optional, detaching the low voltage wires (E) will make installation easier.

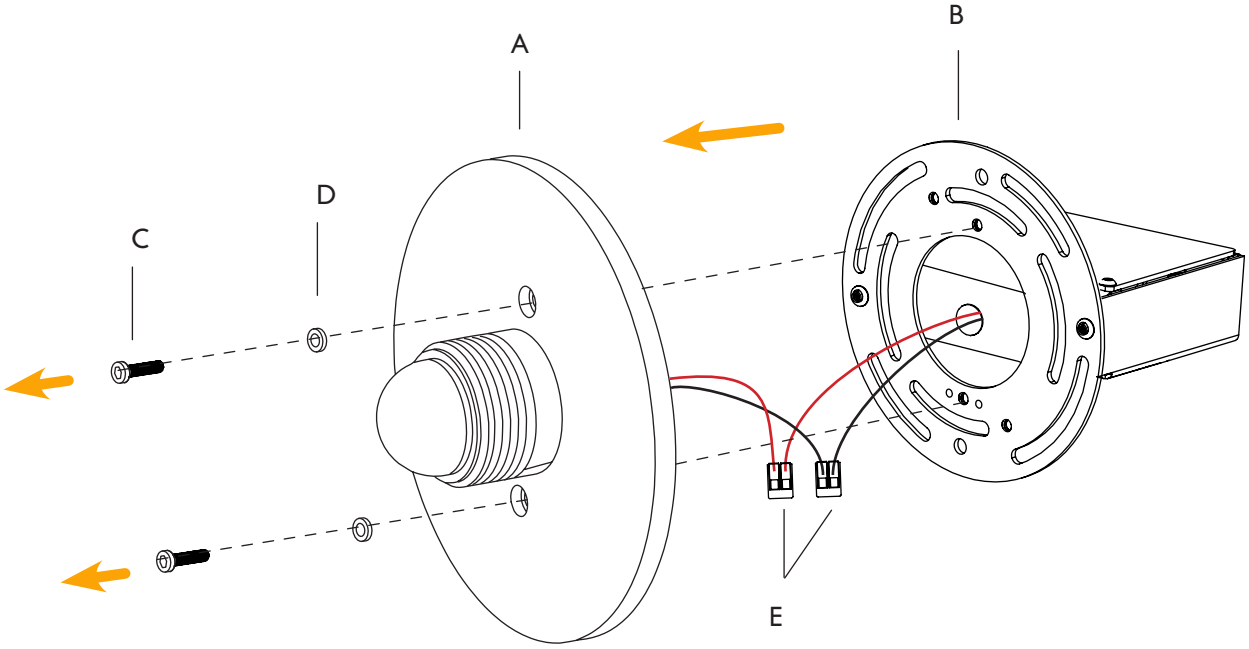

MEMORI TRID SCONCE (240V) | INSTALLATION

Note: Please contact a licensed electrician.

03. Connect the lead wires (F) to the power supply wires.
04. Optional: Make the dimming wires connection (G) with the provided 2-port wagos.
    If dimming is not used, cap the wires with electrical tape or one wago each.
05. Mount the crossbar (B) to the wall with one of the provided 240V screws (H),
    select appropriate screws for the wall material.

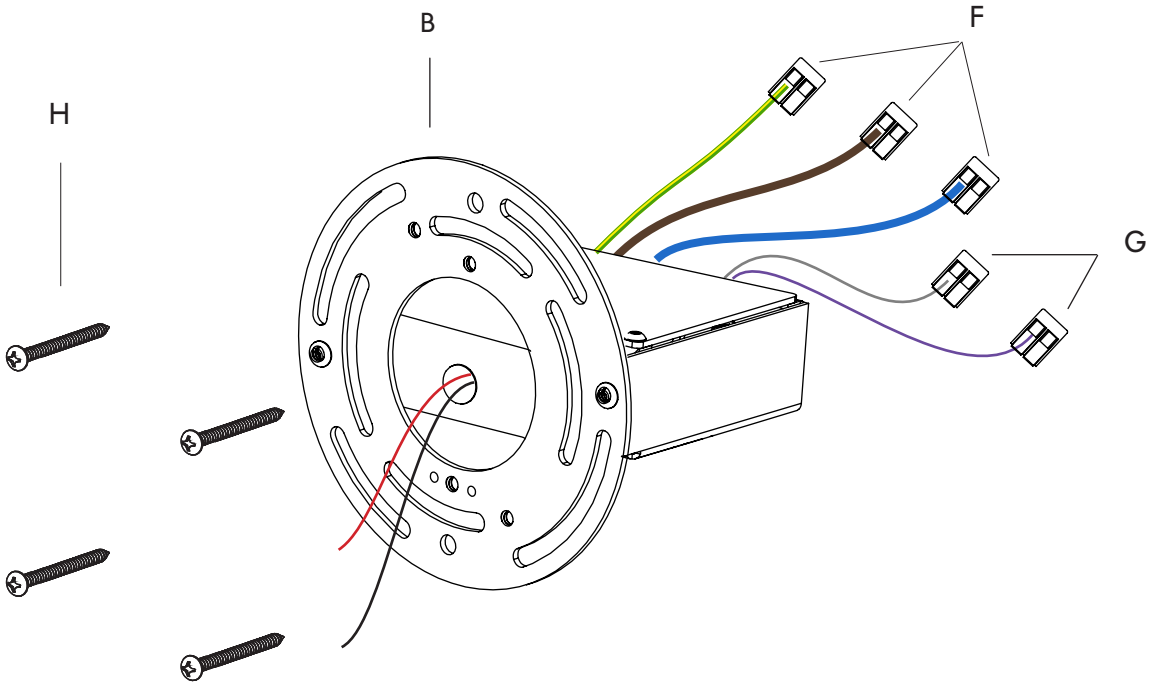

MEMORI TRID SCONCE (240V) | INSTALLATION

Note: Please contact a licensed electrician.

06. Bring the LED assembly back plate (A) up to the crossbar (B).
07. If the low voltage wires (E) were disconnected, then reconnect with the provided wagos, and tuck in the wires behind the crossbar.
08. Secure the LED assembly to the crossbar with two hex screws (C) and washers (D).

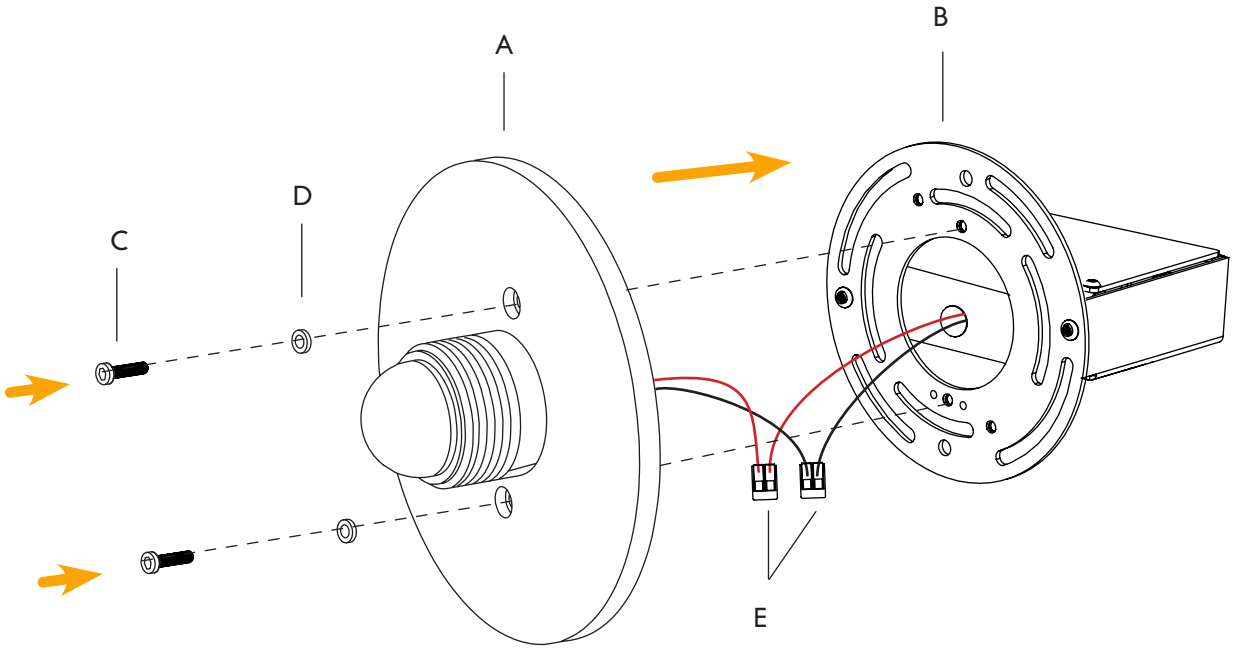

MEMORI TRID SCONCE (240V) | INSTALLATION

Note: Please contact a licensed electrician.

Outdoor installation.

09. Once the LED assembly backplate has been fully installed onto the wall, apply a layer of waterproof construction sealant (silicone/caulk) around the space between the backplate and the wall, around the entire fixture, closing any gaps.

Side View

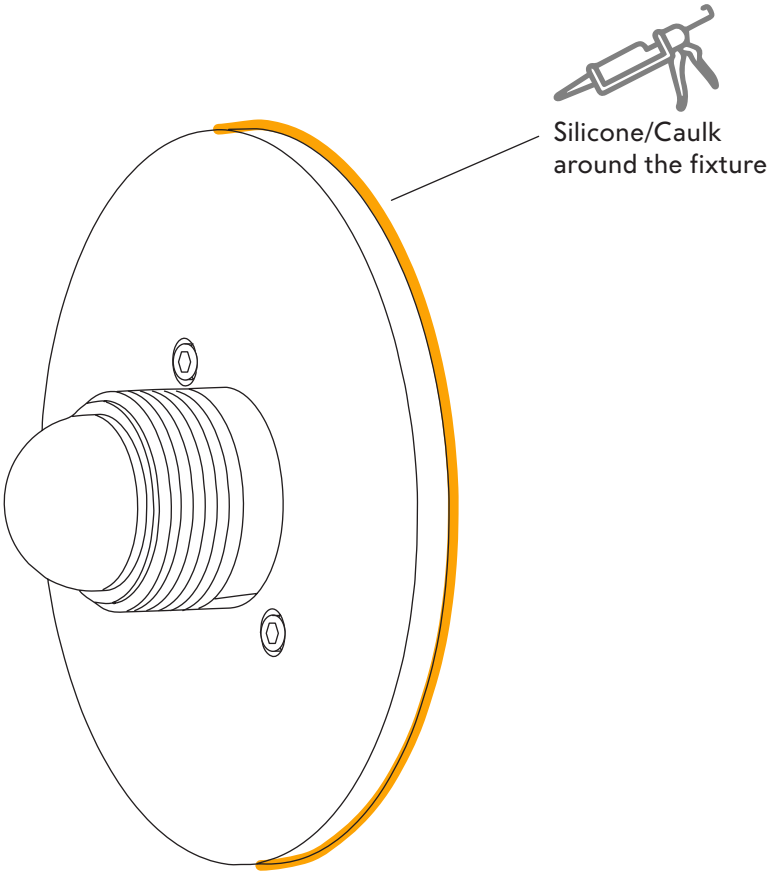

MEMORI TRID SCONCE (240V) | INSTALLATION

Note: Please contact a licensed electrician.
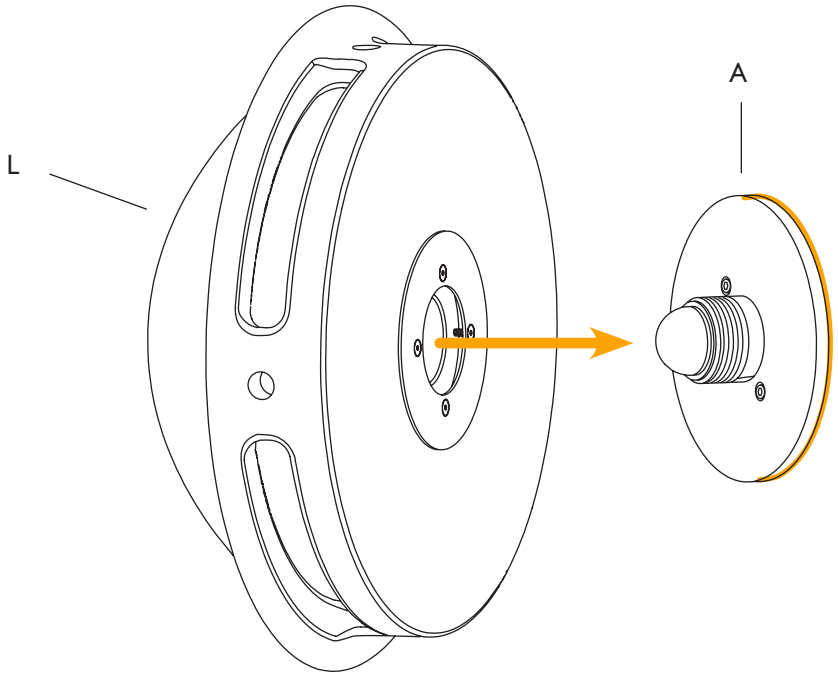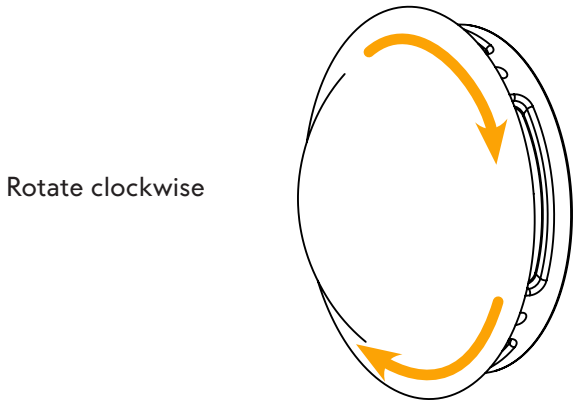
10. Finally, bring the ceramic assembly (L) to the installed LED assembly (A), align the threaded LED mount with the threaded fitter on the ceramic assembly.
11. Then secure the ceramic assembly on the LED assembly plate by screwing on the ceramic assembly onto the LED, rotating it clockwise. Recommended to use two hands.